REGULATORY AGENCIES & UTILITIES

ZONING DEPARTMENT:
POLK COUNTY PLANNING AND DEVELOPMENT
330 W. CHURCH ST.
BARTOW, FL 33830
CONTACT: BENJAMIN J. ZISKAL
E: BENJAMINZISKAL@POLK-COUNTY.NET
T: (863) 534-6084

BUILDING DEPARTMENT:
POLK COUNTY BUILDING DIVISION
330 W. CHURCH ST.
BARTOW, FL 33830
CONTACT: RYAN WIGGINS
E: RYANWIGGINS@POLK-COUNTY.NET
T: (863) 534-6564

FIRE DEPARTMENT:
POLK COUNTY
BUILDING DIVISION
330 W. CHURCH ST.
BARTOW, FL 33830
T: (863) 534-6080

WATER UTILITY:
CITY OF LAKELAND
501 EAST LEMON STREET
LAKELAND, FL 33801
CONTACT: RICK POLSTON
E: RICK.POLSTON@LAKELANDGOV.NET
T: (863) 834-8316

SEWER UTILITY:
CITY OF LAKELAND
501 EAST LEMON STREET
LAKELAND, FL 33801
CONTACT: RICK POLSTON
E: RICK.POLSTON@LAKELANDGOV.NET
T: (863) 834-8316

NATURAL GAS UTILITY:
TECO PEOPLES GAS
P.O. BOX 111
TAMPA, FL 33601
CONTACT: SUSAN ROCHE
E: SEROCHE@TECOENERGY.COM
T: (727) 667-9087

ELECTRICAL UTILITY:
LAKELAND ELECTRIC
228 S MASSACHUSETTS AVE.
LAKELAND, FL 33801
CONTACT: CHELSEA ALLEN
E: CHELSEA.ALLEN@LAKELANDELECTRIC.COM
T: (863) 834-6459

PROJECT INFORMATION

LANDLORD:
ECP PARTNERS
4362 NORTHLAKE BLVD. SUITE 214
CONTACT: MIKE LUCIDO
E: MLUCIDO@ECPDEV.COM
T: (816) 260-9334

TENANT:
CHIPOTLE MEXICAN GRILL
PO BOX 182566
COLUMBUS, OH 43218-2566
CONTACT: TREVOR SCOTT
E: TREVOR.SCOTT@CHIPOTLE.COM

ARCHITECT:
RED ARCHITECTURE
589 W. NATIONWIDE BLVD., SUITE B
COLUMBUS, OH 43215
CONTACT: DANIEL MORRIS
E: DMORRIS@REDARCHITECTURE.COM
P: (614) 487-8770
F: (614) 487-8777

MECHANICAL ELECTRICAL PLUMBING ENGINEER:
ANNEX ENGINEERING GROUP
589 W. NATIONWIDE BLVD. SUITE B
COLUMBUS, OH 43215
CONTACT: SCOTT STAMPER
E: SSTAMPER@ANNEXMEP.COM
T: (614) 481-2292
F: (614) 487-8777

STRUCTURAL ENGINEER:
JEZERINAC GEERS & ASSOCIATES
5640 FRANZ ROAD
DUBLIN, OH 43017
CONTACT: ANDY HEIGLEY
E: AHEIGLEY@JGAENG.COM
T: (614) 766-0066
F: (614) 766-0066

CIVIL ENGINEER:
THOMAS ENGINEERING GROUP
1502 W. FLETCHER AVENUE, SUITE 101
TAMPA, FL 33612
CONTACT: JULIA BURROUGHS
E: JBURROUGHS@THOMASEG.COM
T: (813) 379-4100

GRAPHIC SYMBOLS

1 A101 1 / 1	EXTERIOR ELEVATION MARKER
1 A101 1 / 1	INTERIOR ELEVATION MARKER
SIM 1 A101	SECTION MARKER
SIM 1 A101	SECTION / DETAIL
1 A101 View Name View Scale	VIEW LABEL
0	COLUMN GRID LABEL
Room name 101	ROOM NAME & NUMBER
1	REVISION NUMBER
1i	DOOR NUMBER
XX.X	MISCELLANEOUS EQUIPMENT NUMBER
XX.X	FURNITURE NUMBER
XX.X	KITCHEN EQUIPMENT NUMBER
X	WASHROOM ACCESSORIES NUMBER
W1	WALL TAG
	LEVEL TARGET
	NORTH ARROW
	DIMENSION TARGET
P1	FINISH TAG

ABBREVIATIONS

℄	CENTER LINE
(E)	EXISTING CONSTRUCTION
(N)	NEW CONSTRUCTION
@	AT
Ø	DIAMETER OR ROUND
AFF	ABOVE FINISH FLOOR
ALUM	ALUMINUM
ARCH	ARCHITECT(URAL)
ASS	ALARM SYSTEM SUPPLIER
BD	BOARD
BLDG	BUILDING
CMU	CONCRETE MASONRY UNIT
CO2	CO2 SUPPLIER
CO2AS	CO2 ALARM SUPPLIER
CS	CHEMICAL SUPPLIER
DIM	DIMENSION(S)
EA	EACH
EL	ELEVATION (VERTICAL HEIGHT)
ELEC	ELECTRIC(AL)
ELEV	ELEVATION
EQ	EQUAL
EXT	EXTERIOR
FC	FOR CONSTRUCTION
FRP	FIBERGLASS REINFORCED PANEL
FRT	FIRE RETARDANT-TREATED
GA	GAUGE
GALV	GALVANIZED
GC	GENERAL CONTRACTOR
GYP	GYPSUM
HES	TENANT'S HVAC EQUIPMENT SUPPLIER
HS	HOOD SUPPLIER
HVAC	HEATING AND VENTILATING
ICP	INITIAL COST PROJECTION
IFP	IN FOR PERMIT
INT	INTERIOR
KES	KITCHEN EQUIPMENT SUPPLIER
MAX	MAXIMUM
MECH	MECHANICAL
MFR	MANUFACTURER
MIN	MINIMUM
MISC	MISCELLANEOUS
MSS	MUSIC SYSTEMS SUPPLIER
N.I.C.	NOT IN CONTRACT
NO	NUMBER
OC	ON CENTER
OSB	ORIENTED STRAND BOARD
POS	POINT OF SALE
PREP	PREPARATION
PVC	POLYVINYL CHLORIDE
QT	QUARRY TILE
R	RADIUS
RTU	ROOF TOP UNITS
SIM	SIMILAR
SPS	SODA POP SUPPLIER
SS	SUPPORT SIGNAGE
STR	STRUCTURE
T	TENANT
TAB	TENANT'S TEST & BALANCE VENDOR
TAS	TENANT'S ARTWORK SUPPLIER
TBD	TO BE DETERMINED, SEE FIELD REFERENCE MANUAL
TCC	TENANT'S CABLING CONTRACTOR
TDC	TENANT'S DUCT CLEANER
TEMS	TENANT'S ENERGY MANAGEMENT SYSTEM SUPPLIER
THS	TENANT'S HARDWARE SUPPLIER
TLS	TENANT'S LIGHT/LAMP SUPPLIER
TMB	TENANT'S MENU BOARD SUPPLIER
TMS	TENANT'S MILLWORK SUPPLIER
TP	TENANT'S PHONE SUPPLIER
TPS	TENANT PANELBOARD SUPPLIER
TRS	TENANT'S RAILING SUPPLIER
TS	TENANT'S SAFE SUPPLIER
TSS	TENANT'S SMART SAFE SUPPLIER
TSV	TENANT'S SIGN VENDOR
TUV	TENANT'S UV SUPPLIER
TYP	TYPICAL
U.N.O.	UNLESS NOTED OTHERWISE
UPS	UNINTERRUPTED POWER SUPPLY
VAR	VARIES
VIF	VERIFY IN FIELD
W/	WITH
WA	WASHROOM ACCESSORIES
WCS	TENANT'S WALK-IN COOLER SUPPLIER
WHS	WATER HEATER SUPPLIER
WS	TENANT'S WINDOW SHADE SUPPLIER

ECP PARTNERS

CMG HIGHLAND CITY SHELL, FL
TBD US 98
LAKELAND, FL 33812

SCOPE OF WORK

NEW COLD, DARK SHELL BUILDING. INTERIOR TO BE BUILT OUT BY TENANT UNDER SEPARATE PERMIT. PROVIDE BUILDING WITH ELECTRICAL SERVICE STUBBED IN LOCATION, GREASE INTERCEPTOR AND GAS METER, DUMPSTER ENCLOSURE. SITE WORK IS BEING PERMITTED UNDER A SEPARATE PERMIT, REFER TO ASSOCIATED CIVIL DRAWINGS.

VICINITY MAP

TBD US 98

1 G000 **VICINITY MAP**
N.T.S.

KEY PLAN

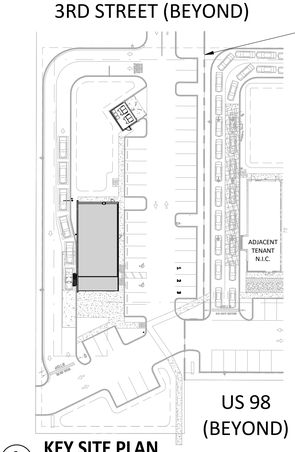

TRUE PLAN 2 G000 **KEY SITE PLAN**
1" = 60'-0"

DRAWING INDEX AND REVISIONS

SHEET NO.	SHEET NAME	REVISION 1	2	3	4	5	6	7	8	9	10	11	12	13	14	15
GENERAL																
G000	COVER SHEET															
G001	PROJECT DATA & LIFE SAFETY PLAN															
G002	ACCESSIBILITY REQUIREMENTS															
G010	ARCHITECTURAL SPECIFICATIONS															
G011	ARCHITECTURAL SPECIFICATIONS															
G012	ARCHITECTURAL SPECIFICATIONS															
G013	ARCHITECTURAL SPECIFICATIONS															
G014	ARCHITECTURAL SPECIFICATIONS															
G015	ARCHITECTURAL SPECIFICATIONS															
G016	ARCHITECTURAL SPECIFICATIONS															
SITE PLAN																
SP100	ARCHITECTURAL SITE PLAN															
SP102	DUMPSTER PLAN & DETAILS															
ARCHITECTURAL																
A100	ARCHITECTURAL SHELL PLAN															
A140	ARCHITECTURAL ROOF PLAN															
A201	REFLECTED CEILING PLAN															
A301	EXTERIOR ELEVATIONS															
A401	BUILDING SECTIONS															
A402	BUILDING SECTIONS															
A403	WALL SECTIONS															
A404	WALL SECTIONS															
A405	WALL SECTIONS															
A406	SECTION DETAILS															
A407	SECTION DETAILS															
A408	STUCCO DETAILS															
A409	PLAN DETAILS															
A601	DOOR & HARDWARE SCHEDULE															
A602	STOREFRONT DETAILS															
A901	EXTERIOR PERSPECTIVES															
STRUCTURAL																
S000	GENERAL STRUCTURE INFO.															
S001	SPECIAL INSPECTIONS															
S002	TYPICAL DETAILS															
S100	FOUNDATION PLAN															
S110	ROOF FRAMING PLAN															
S200	FOUNDATION DETAILS															
S300	FRAMING DETAILS															
S301	FRAMING DETAILS															
PLUMBING																
P100	WASTE, VENT, & SUPPLY PLAN PLUMBING SHELL															
P400	DETAILS & SCHEDULES PLUMBING SHELL															
P710	SPECIFICATIONS PLUMBING SHELL															
P720	SPECIFICATIONS PLUMBING SHELL															
P730	SPECIFICATIONS PLUMBING SHELL															
ELECTRICAL																
E100	SITE PLAN ELECTRICAL SHELL															
E200	POWER & LIGHTING PLAN ELECTRICAL SHELL															
E400	DETAILS & DIAGRAMS ELECTRICAL SHELL															
E700	ELECTRICAL SPECIFICATIONS															
GRAND TOTAL: 45																

CIVIL DRAWINGS ARE SUBMITTED UNDER SEPERATE PERMIT

PRODUCT APPROVAL SPECIFICATIONS

CATEGORY	MANUFACTURER	PRODUCT DESCRIPTION	APPROVAL NUMBER
WINDOWS			
PICK UP WINDOW	QUIKSERV	BI-PARTING ALUMINUM PASS THRU WINDOW	NOA-18-014.01
PANEL WALLS			
SIDING	PAC-CLAD	STEEL WALL PANEL (WITH CONCEALED CLIPS) - FLUSH PANEL (24 GA.)	23225.4
SIDING	PAC-CLAD	STEEL WALL PANEL (WITH CONCEALED CLIPS) PRECISION SERIES HWP (24 GA.)	23225.44
STOREFRONT	KAWNEER	TRIFAB VG 451T STOREFRONT SYSTEM - 2"x4 1/2"	FL14287
ROOFING PRODUCTS			
SINGLE PLY ROOFING	DURO-LAST	PVC SINGLE PLY MEMBRANE ROOFING SYSTEM	FL16039-R17

Consultant:
R/A
Red Architecture
589 W. NATIONWIDE BLVD. SUITE B
COLUMBUS, OHIO 43215 (614) 487-8770

BID DOCUMENTS ONLY NOT FOR CONSTRUCTION

COPYRIGHT 2026
ALL DRAWINGS AND SPECIFICATIONS SHALL REMAIN THE PROPERTY OF RED ARCHITECTURE LLC AND MAY NOT BE USED, DUPLICATED, OR ALTERED WITHOUT WRITTEN CONSENT OF THE ARCHITECT.

ECP PARTNERS

CMG HIGHLAND CITY SHELL, FL
TBD US 98
LAKELAND, FL 33812

Issue Record:

02/25/26	PERMIT SET
02/25/26	BID SET

Revisions:

Drawn: JLH,PH
Checked: DM,DF

Project No. EPL002

Contents: COVER SHEET

G000

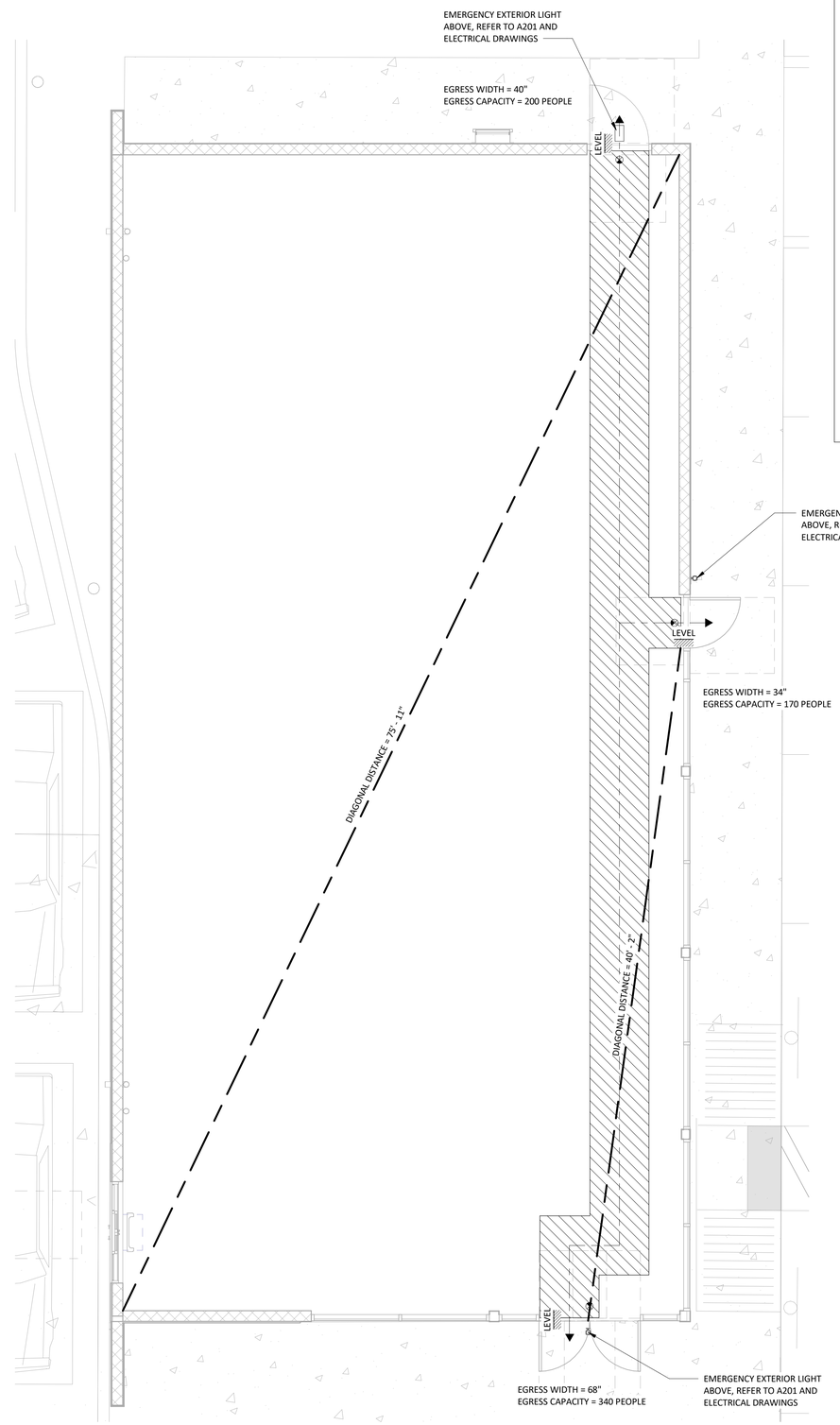

1 G001 **LIFE SAFETY PLAN**
1/4" = 1'-0"

GENERAL NOTES PER FBC 2023

- [x] 44" REQUIRED EGRESS CORRIDOR WIDTH FOR OCCUPANCIES 50+.
  42" REQUIRED EGRESS AISLE WIDTH FOR OCCUPANCIES 50 AND OVER.
  36" REQUIRED EGRESS WIDTH FOR OCCUPANCIES UNDER 50.
  SECT. 1020.3 AND 1030.9.1
- [x] NO DEAD END CORRIDORS OVER 20'-0"
  SECT. 1020.5
- [x] MAXIMUM EGRESS TRAVEL DISTANCE TO AN EXIT IS 75'-0". MEASURED AS MOST REMOTE POINT ALONG THE NATURAL AND UNOBSTRUCTED PATH OF HORIZONTAL AND VERTICAL TRAVEL TO THE EXIT.
  TABLE 1006.2.1
- [x] DISTANCE BETWEEN TWO POINTS OF EGRESS (MEASURED IN A STRAIGHT LINE BETWEEN THE TWO) SHALL NOT BE LESS THAN 1/2 DIAGONAL OF SPACE BEING SERVED FOR EGRESS PATH.
  SECT. 1007.1.1
- [ ] IF FULLY SPRINKLERED DISTANCE BETWEEN TWO POINTS OF EGRESS CAN GO DOWN TO 1/3 OF DIAGONAL.
- [x] MAXIMUM EXIT ACCESS TRAVEL DISTANCE 200' W/OUT SPRINKLER, 250' W/ SPRINKLER.
  TABLE 1017.2
- [ ] MINIMUM DISTANCE BETWEEN SEATS IS 12" FOR A DISTANCE OF 12'-0" WITH AN ADDITIONAL 1/2" OF WIDTH FOR EACH 1'-0" OR FRACTION THEREOF BEYOND ORIGINAL 12'-0".
  SECT. 1030.13.1.1
- [ ] EGRESS ALONG SEATING IS MEASURED 19" FROM EDGE OF TABLE WHERE MOVEABLE CHAIRS ARE USED, OR FROM THE EDGE OF A FIXED SEAT.
- [x] DOORS IN FULLY OPEN POSITION SHALL NOT REDUCE A REQUIRED DIMENSION BY MORE THAN 7 INCHES. SECTION 1010.1.5 LANDINGS SHALL HAVE A LENGTH MEASURED IN THE DIRECTION OF TRAVEL OF NOT LESS THAN 44 INCHES.
- [x] DOORS, WHEN FULLY OPENED SHALL NOT REDUCE THE REQUIRED MEANS OF EGRESS WIDTH BY MORE THAN 7 INCHES. DOORS IN ANY POSITION SHALL NOT REDUCE THE REQUIRED WIDTH BY MORE THAN ONE-HALF.
  SECT. 1005.7.1
- [ ] SPACE BETWEEN TWO DOORS IN A SERIES SHALL BE 48 INCHES MIN. PLUS WIDTH OF A DOOR SWINGING INTO SPACE.
  SECT. 1010.1.7

BUILDING CODE & ZONING DATA

1.	OCCUPANCY GROUP:	A-2
	OCCUPANCY SEPARATION REQUIRED:	N/A
	OCCUPANCY SEPARATION PROVIDED:	N/A
2.	TYPE OF CONSTRUCTION:	V-B
3.	USE GROUP:	A-2
	ALLOWABLE AREA:	6,000 S.F.
	AREA INCREASE W/ SPRINKLERS:	N/A
	ACTUAL AREA:	2,385 S.F.
	TENANT LEASE AREA:	2,385 S.F.
4.	ALLOWABLE NO. OF STORIES:	1
	ACTUAL NO. OF STORIES:	1
	ALLOWABLE BUILDING HEIGHT:	40'-0" MAXIMUM HEIGHT
	ACTUAL BUILDING HEIGHT:	19'-0"
5.	CALCULATED OCCUPANT LOAD:	BY FUTURE TENANT UNDER SEPERATE PERMIT, NOT TO EXCEDED 99
6.	MEANS OF EGRESS REQUIRED:	2
	MEANS OF EGRESS PROVIDED:	3
7.	FIRE SPRINKLERS:	NONE
8.	PLUMBING FIXTURES:	BY FUTURE TENANT, UNDER SEPERATE PERMIT

CODE AUTHORITIES

BUILDING CODE:	2023 FLORIDA BUILDING CODE
EXISTING BUILDING CODE:	2023 FLORIDA EXISTING BUILDING CODE
MECHANICAL CODE:	2023 FLORIDA MECHANICAL CODE
PLUMBING CODE:	2023 FLORIDA PLUMBING CODE
ENERGY CODE:	2023 FLORIDA ENERGY COSNERVATION CODE
FUEL GAS CODE:	2023 FLORIDA FUEL GAS CODE
ELECTRICAL CODE:	2020 NATIONAL ELECTRIC CODE, NFPA 70
FIRE CODE:	2023 FLORIDA FIRE PREVENTION CODE
ACCESSIBLITY:	2023 FLORIDA ACCESSIBILITY CODE

EGRESS SEPARATION NOTE

OVERALL DISTANCE:	75'-11"
REQUIRED SEPARATION:	37'-11 1/2" (NON-SPRINKLERED)
PROVIDED SEPARATION:	40'-2"

Consultant:
R/A
Red Architecture
589 W. NATIONWIDE BLVD. SUITE B
COLUMBUS, OHIO 43215 (614) 487-8770

BID DOCUMENTS ONLY NOT FOR CONSTRUCTION

COPYRIGHT 2026
ALL DRAWINGS AND SPECIFICATIONS SHALL REMAIN THE PROPERTY OF RED ARCHITECTURE LLC AND MAY NOT BE USED, DUPLICATED, OR ALTERED WITHOUT WRITTEN CONSENT OF THE ARCHITECT.

ECP PARTNERS

CMG HIGHLAND CITY SHELL, FL
TBD US 98
LAKELAND, FL 33812

Issue Record:

02/25/26	PERMIT SET
02/25/26	BID SET

Revisions:

Drawn: JLH,PH
Checked: DM,DF

Project No. EPL002

Contents:

PROJECT DATA & LIFE SAFETY PLAN

G001

A.D.A. INTERIOR ACCESSIBILITY COMPONENTS

THIS TENANT SPACE IS REQUIRED TO BE ACCESSIBLE AS SET FORTH IN THE AMERICANS WITH DISABILITIES ACT OF 1994 AND ITS REVISED 2010 STANDARDS FOR ACCESSIBLE DESIGN. MAINTAIN COMPLIANCE WITH ALL APPLICABLE REQUIREMENTS OF THE ACT AND ITS ACCESSIBILITY GUIDELINES (A.D.A.), (A.D.A.A.G.).

TABLEWARE AREAS

1. FOOD SERVICE LINES SHALL HAVE A MINIMUM CLEAR WIDTH OF 36" WITH TRAY SLIDES MOUNTED NO HIGHER THAN 34" ABOVE THE FLOOR. IF SELF-SERVICE SHELVES ARE PROVIDED, AT LEAST 50% OF EACH TYPE MUST BE WITHIN REACH RANGES SPECIFIED IN SECTION 308.

2. SELF-SERVICE SHELVES AND DISPENSING DEVICES FOR DISHWARE, CONDIMENTS, FOOD AND BEVERAGES SHALL BE INSTALLED TO COMPLY WITH SECTION 308.

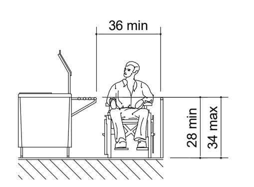

FOOD SERVICE LINES

STAIRS

1. ACCESSIBLE STAIRS SHALL COMPLY WITH SECTION 504.

2. ALL STEPS ON A FLIGHT OF STAIRS SHALL HAVE UNIFORM RISER HEIGHTS TREAD DEPTHS ALONG EACH RUN. RISERS SHALL BE 4" HIGH MIN. AND UNIFORM AND 7" HIGH MAX. TREAD SHALL BE 11" DEEP MIN.

3. THE CLEAR SPACE BETWEEN HANDRAILS AND WALL SHALL BE 1-1/2" MIN. HANDRAIL GRIPPING SURFACES SHALL BE CONTINUOUS ALONG THEIR LENGTH AND SHALL NOT BE OBSTRUCTED ALONG THEIR TOP AND SIDES. THE TOP OF HANDRAIL GRIPPING SURFACES SHALL BE INSTALLED BETWEEN 34" AND 38" ABOVE STAIR NOSINGS.

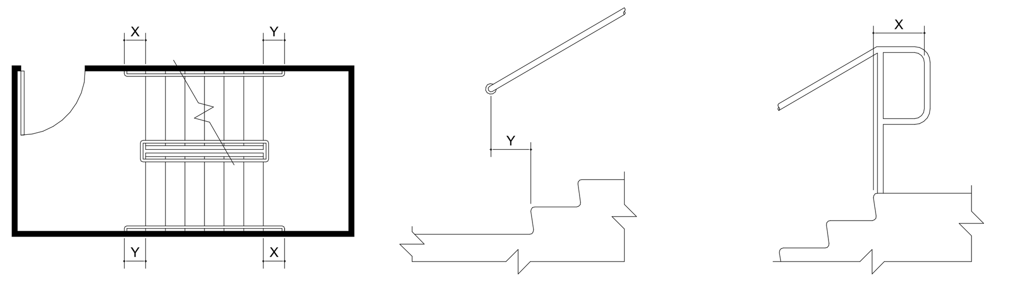

PLAN — EXTENSION AT BOTTOM OF RUN — EXTENSION AT TOP OF RUN

NOTE:
X IS THE MINIMUM HANDRAIL EXTENSION REQUIRED AT EACH TOP RISER. X = 12" MIN. Y IS THE MINIMUM HANDRAIL EXTENSION REQUIRED AT EACH BOTTOM RISER. Y IS EQUAL TO OR GREATER THAN THE TREAD DEPTH.

RESTROOMS

1. ELEMENTS OF ACCESSIBLE RESTROOMS SHALL COMPLY WITH SECTIONS 603, 604, 605, 606, 607, 608, 609 & 610.

2. ACCESSIBLE URINALS SHALL BE STALL-TYPE OR WALL-HUNG AT A MAXIMUM OF 17" ABOVE FINISH FLOOR. URINALS SHALL HAVE A 30" x 48" CLEAR FLOOR SPACE TO ALLOW A FRONT APPROACH AND THE FLUSH CONTROLS SHALL BE HAND-OPERATED WITH THE CONTROLS INSTALLED ACCORDING TO SECTION 308.

3. HOT WATER LINES AND DRAIN PIPES UNDER LAVATORIES SHALL BE INSULATED OR OTHERWISE CONFIGURED TO PROTECT AGAINST CONTACT. THERE SHALL BE NO SHARP OR ABRASIVE SURFACES UNDER LAVATORIES.

4. IF HAND OPERATED METERING FAUCETS ARE USED, THE FAUCET SHALL REMAIN OPEN FOR 10 SECONDS MINIMUM.

5. THE SPACE BETWEEN ANY OBSTRUCTION AND THE GRAB BAR SHALL BE 1-1/2". THE GRAB BAR ASSEMBLY SHALL BE CAPABLE OF WITHSTANDING BENDING STRESSES, SHEAR STRESSES, SHEAR FORCES, AND TENSILE FORCES OF UP TO 250 LBF. GRAB BARS SHALL NOT ROTATE WITHIN THEIR FITTINGS.

6. MOUNTING HEIGHTS TO OPERATING CONTROLS FOR RESTROOM ACCESSORIES NOT SPECIFICALLY CALLED OUT IN THE A.D.A. SHALL COMPLY WITH THE REACH RANGES SPECIFIED IN SECTION 308.

7. FLUSH CONTROLS SHALL BE HAND OPERATED OR AUTOMATIC. HAND OPERATED CONTROLS SHALL COMPLY WITH 309 AND BE LOCATED ON THE OPEN SIDE OF THE WATER CLOSET

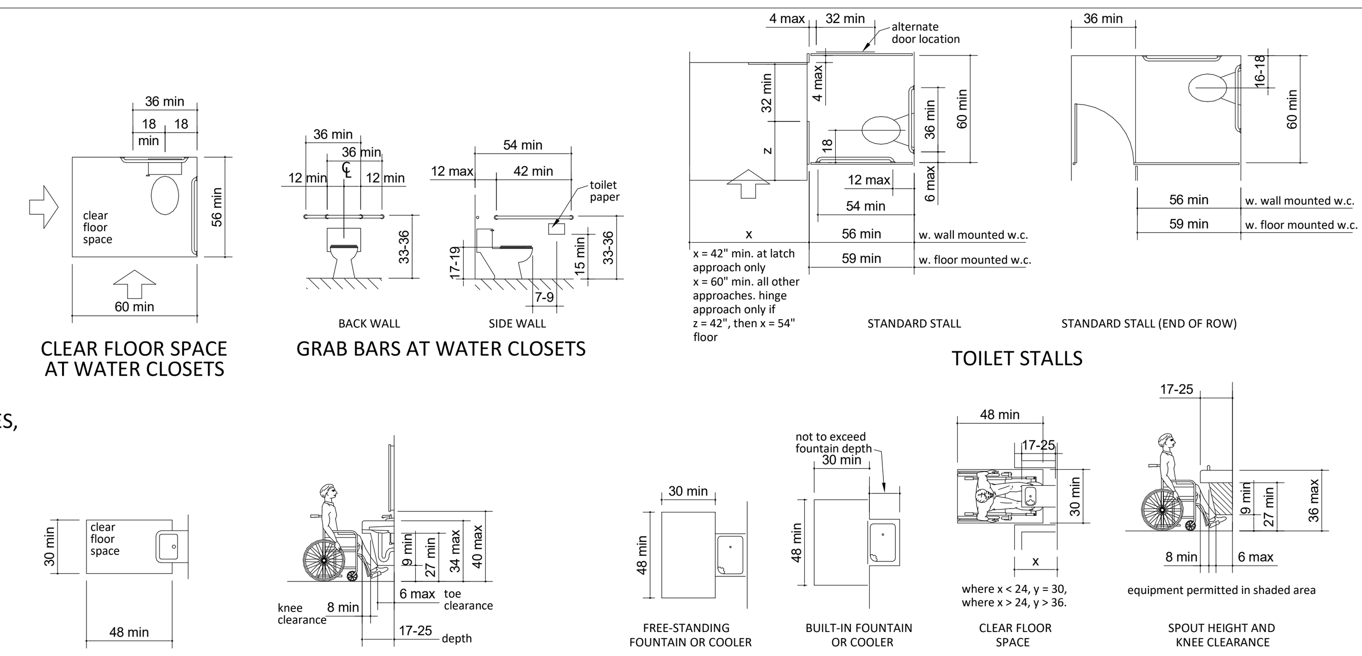

CLEAR FLOOR SPACE AT WATER CLOSETS — GRAB BARS AT WATER CLOSETS — TOILET STALLS — CLEAR FLOOR SPACE AT LAVATORIES — LAVATORY CLEARANCE — DRINKING FOUNTAINS AND WATER COOLERS

DOORS

1. ACCESSIBLE DOORS SHALL COMPLY WITH SECTION 404.

2. THRESHOLD, IF PROVIDED AT DOORWAYS, SHALL BE 1/2" HIGH MAXIMUM. EXISTING OR ALTERED THRESHOLDS 3/4" HIGH MAXIMUM THAT HAVE A BEVELED EDGE ON EACH SIDE WITH A SLOPE NOT STEEPER THAN 1:2 ARE ALSO PERMITTED.

3. DOOR AND GATE HARDWARE. HANDLES, PULLS, LATCHES, LOCKS AND OTHER OPERABLE PARTS ON DOORS AND GATES SHALL COMPLY WITH 309.4. OPERABLE PARTS OF SUCH HARDWARE SHALL BE 34" MINIMUM AND 48" MAXIMUM ABOVE THE FINISH FLOOR OR GROUND. WHERE SLIDING DOORS ARE IN THE FULLY OPEN POSITION, OPERATING HARDWARE SHALL BE EXPOSED AND USABLE FROM BOTH SIDES.

4. DOOR CLOSERS AND GATE CLOSERS. DOOR CLOSERS AND GATE CLOSERS SHALL BE ADJUSTED SO THAT FROM AN OPEN POSITION OF 90 DEGREES, THE TIME REQUIRED TO MOVE THE DOOR TO A POSITION OF 12 DEGREES FROM THE LATCH IS 5 SECONDS MINIMUM. SPRING HINGES. DOOR AND GATE SPRING HINGES SHALL BE ADJUSTED SO THAT FROM THE OPEN POSITION OF 70 DEGREES, THE DOOR OR GATE SHALL MOVE TO THE CLOSED POSITION IN 1.5 SECONDS MINIMUM.

5. ACCESSIBLE DOORS THAT ARE NOT FIRE DOORS OR EXTERIOR HINGED DOORS SHALL HAVE A MAXIMUM FORCE FOR PUSHING OR PULLING THE DOOR OPEN OF 5 LBF. THIS FORCE DOES NOT APPLY TO THE FORCE REQUIRED TO RETRACT LATCH BOLTS OR DISENGAGE OTHER DEVICES THAT MAY HOLD A DOOR IN A CLOSED POSITION.

NOTE: ALL DOORS IN ALCOVES SHALL COMPLY WITH THE CLEARANCES FOR FRONT APPROACHES.

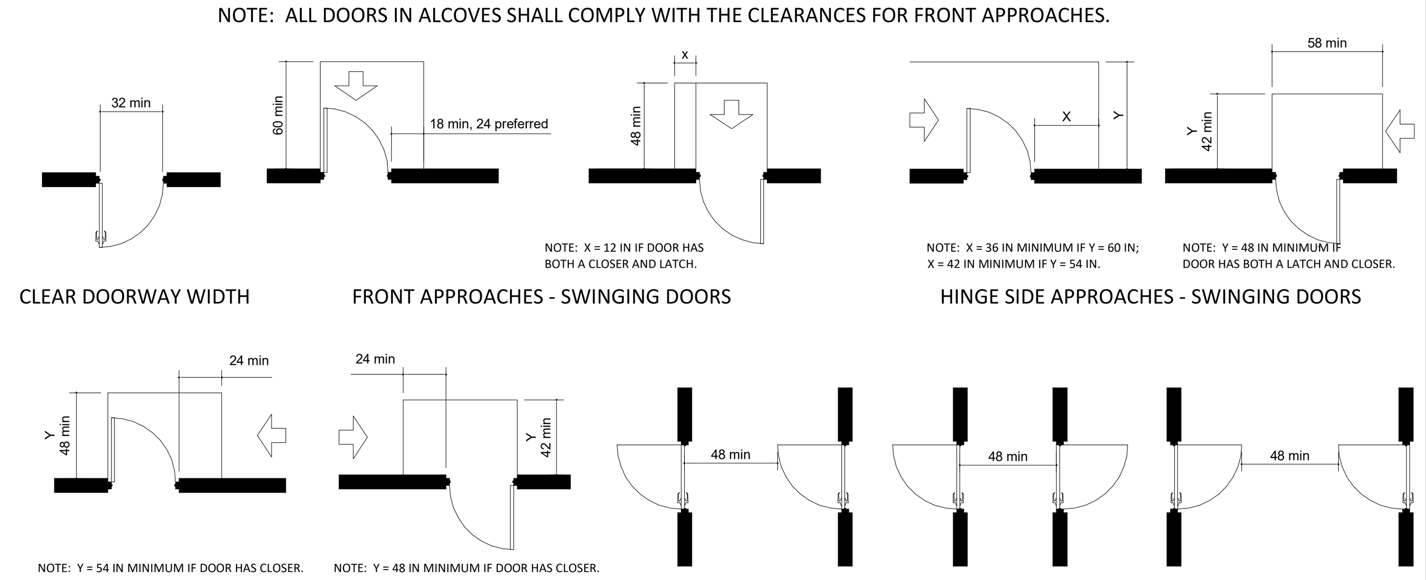

CLEAR DOORWAY WIDTH — FRONT APPROACHES - SWINGING DOORS — HINGE SIDE APPROACHES - SWINGING DOORS — LATCH SIDE APPROACHES - SWINGING DOORS — TWO HINGED DOORS IN SERIES

PATH OF TRAVEL

1. ALL WALKS, HALLS, CORRIDORS, AISLES, SKYWALKS, TUNNELS, AND OTHER SPACES THAT ARE PART OF AN ACCESSIBLE ROUTE SHALL COMPLY WITH SECTION 402 AND ANY OTHER APPLICABLE SECTION OF CH. 4.

2. AT LEAST ONE ACCESSIBLE ROUTE SHALL CONNECT ACCESSIBLE BUILDING OR FACILITY ENTRANCES WITH ALL ACCESSIBLE SPACES AND ELEMENTS.

3. AN ACCESSIBLE ROUTE WITH A RUNNING SLOPE GREATER THAN 1:20 IS A RAMP AND SHALL COMPLY WITH 405. NOWHERE SHALL THE CROSS SLOPE OF AN ACCESSIBLE ROUTE EXCEED 1:48.

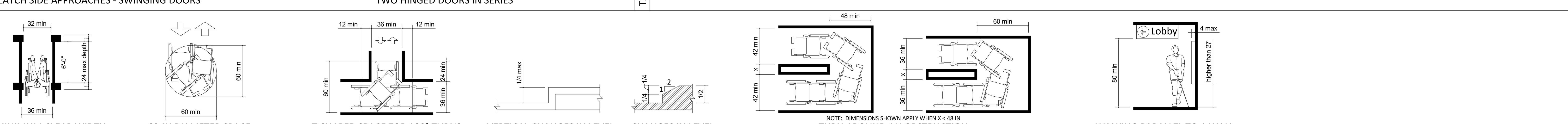

MINIMUM CLEAR WIDTH FOR SINGLE WHEELCHAIR — 60-IN DIAMETER SPACE — T-SHAPED SPACE FOR 180° TURNS — VERTICAL CHANGES IN LEVEL — CHANGES IN LEVEL — TURN AROUND AN OBSTRUCTION — WALKING PARALLEL TO A WALL

RAMPS

1. ACCESSIBLE RAMPS SHALL COMPLY WITH SECTION 405.

2. IF A RAMP HAS A RISE GREATER THAN 6" OR A HORIZONTAL PROJECTION GREATER THAN 72", THEN IT SHALL HAVE HANDRAILS ON BOTH SIDES. HANDRAILS ARE NOT REQUIRED ADJACENT TO ASSEMBLY SEATING AREAS. CLEAR SPACE BETWEEN A HANDRAIL AND AN ADJACENT WALL SHALL BE 1-1/2" MIN.

3. THE CROSS SLOPE OF RAMP SURFACES SHALL BE NO GREATER THAN 1:48.

4. EXISTING RAMP'S SLOPE SHALL COMPLY WITH SECTION 405.2. FOR A RAMP NOT RISING MORE THAN 3" THE MAXIMUM SLOPE CAN BE 1:8>X>1:10. FOR A RAMP RISING GREATER THAN 3" BUT NOT MORE THAN 6" THE MAXIMUM SLOPE CAN BE 1:10>X>1:12.

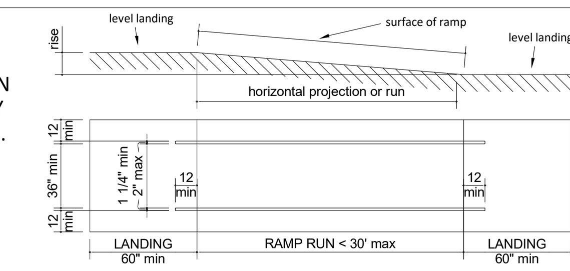

COMPONENTS OF A SINGLE RAMP RUN AND SAMPLE RAMP DIMENSIONS

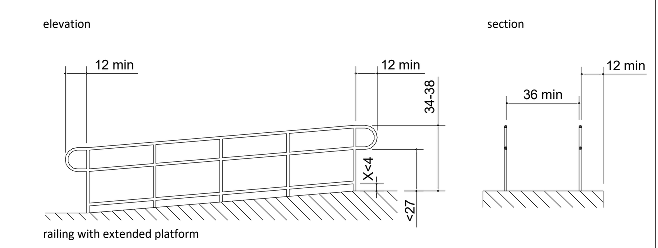

EXAMPLES OF EDGE PROTECTION AND HANDRAIL EXTENSIONS

CONTROLS

1. CONTROLS & OPERATING MECHANISMS SHALL COMPLY WITH SECTION 309.

2. ALL CONTROLS & OPERATING MECHANISMS WHICH ARE INTENDED FOR NORMAL USE BY BUILDING OCCUPANTS SHALL BE PROVIDED WITH A.D.A.-COMPLIANT CLEAR FLOOR SPACES & SHALL COMPLY WITH REACH RANGES IN SECTION 308.

3. REACH RANGES FOR CHILDREN UNDER AGES 12 SHALL COMPLY WITH SECTION 308.1.

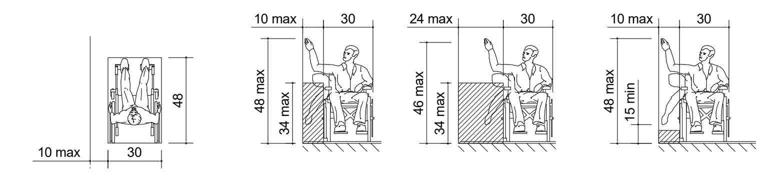

CLEAR FLOOR SPACE PARALLEL APPROACH — OBSTRUCTED HIGH SIDE REACH — UNOBSTRUCTED SIDE REACH

SIDE REACH

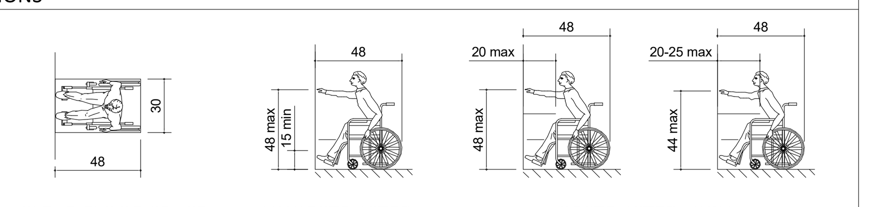

CLEAR FLOOR SPACE FORWARD APPROACH — UNOBSTRUCTED SIDE REACH — OBSTRUCTED HIGH SIDE REACH

FORWARD REACH

SIGNAGE

1. ACCESSIBLE SIGNAGE SHALL COMPLY WITH SECTION 703.

2. LETTERS AND NUMBERS ON SIGNS SHALL HAVE A WIDTH-TO-HEIGHT RATIO BETWEEN 3:5 AND 1:1 AND A STROKE-WIDTH-TO-HEIGHT RATIO BETWEEN 1:5 AND 1:10.

3. CHARACTERS AND NUMBERS ON SIGNS SHALL BE SIZED ACCORDING TO THE VIEWING DISTANCE FROM WHICH THEY ARE TO BE READ. CHARACTER HEIGHT SHALL BE MEASURED VERTICALLY FROM THE BASELINE OF THE CHARACTER SHALL BE 5/8" MIN. AND 2" MAX. BASED ON THE HEIGHT OF THE UPPERCASE LETTER "I"

4. LETTERS AND NUMERALS SHALL BE RAISED 1/32", UPPER-CASE SANS SERIF TYPE, AND SHALL BE ACCOMPANIED WITH GRADE 2 BRAILLE. RAISED CHARACTERS SHALL BE AT LEAST 5/8" HIGH, BUT NO HIGHER THAN 2". PICTOGRAMS SHALL BE ACCOMPANIED BY THE EQUIVALENT VERBAL DESCRIPTION PLACED DIRECTLY BELOW THE PICTOGRAM. THE BORDER DIMENSION OF THE PICTOGRAM SHALL BE 6" MINIMUM IN HEIGHT. BRAILLE SHALL NOT BE LOCATED IN THE PICTOGRAM FIELD.

5. THE CHARACTERS AND BACKGROUND OF SIGNS SHALL BE EGGSHELL, MATTE, OR OTHER NON-GLARE FINISH. CHARACTERS AND SYMBOLS SHALL CONTRAST WITH THEIR BACKGROUND - EITHER LIGHT CHARACTERS ON A DARK BACKGROUND OR DARK CHARACTERS ON A LIGHT BACKGROUND.

6. WHERE A TACTILE SIGN IS PROVIDED AT A DOOR, THE SIGN SHALL BE LOCATED ALONGSIDE THE DOOR AT THE LATCH SIDE. WHERE A TACTILE SIGN IS PROVIDED AT DOUBLE DOORS WITH ONE ACTIVE LEAF, THE SIGN SHALL BE LOCATED ON THE INACTIVE LEAF. WHERE A TACTILE SIGN IS PROVIDED AT DOUBLE DOORS WITH TWO ACTIVE LEAFS, THE SIGN SHALL BE LOCATED TO THE RIGHT SIDE OF THE RIGHT HAND DOOR.WHERE THERE IS NO WALL SPACE AT THE LATCH SIDE OF A SINGLE DOOR OR AT THE RIGHT SIDE OF DOUBLE DOORS, SIGNS SHALL BE LOCATED ON THE NEAREST ADJACENT WALL. SIGNS CONTAINING TACTILE CHARACTERS SHALL BE LOCATED SO THAT A CLEAR FLOOR SPACE OF 18" MIN. BY 18" MIN, CENTERED ON THE TACTILE CHARACTERS, IS PROVIDED BEYOND THE ARC OF ANY DOOR SWING BETWEEN THE CLOSED DOOR AND THE 45 DEGREE OPEN POSITION.

HEIGHT TO FINISH FLOOR OR GROUND FROM BASELINE OF CHARACTER	HORIZONTAL VIEWING DISTANCE	MINIMUM CHARACTER HEIGHT
40" TO LESS THAN OR EQUAL TO 70"	LESS THAN 72"	5/8"
	72" AND GREATER	5/8" PLUS 1/8"/FT OF VIEWING DISTANCE ABOVE 72"
GREATER THAN 70" TO LESS THAN OR EQUAL TO 120"	LESS THAN 180"	2"
	180 INCHES AND GREATER	2" PLUS 1/8"/FT OF VIEWING DISTANCE ABOVE 180"
GREATER THAN 120"	LESS THAN 21'	3"
	21' AND GREATER	3" PLUS 1/8"/FT OF VIEWING DISTANCE ABOVE 21'

INTERNATIONAL SYMBOL OF ACCESSIBILITY — DISPLAY CONDITIONS - INTERNATIONAL SYMBOL OF ACCESSIBILITY

TABLE SEATING

1. WHERE FIXED TABLES (OR DINING COUNTERS WHERE FOOD IS CONSUMED BUT THERE IS NO SERVICE) ARE PROVIDED, AT LEAST 5 %, BUT NOT LESS THAN ONE, OF THE FIXED TABLES (OR A PORTION OF THE DINING COUNTER) SHALL BE ACCESSIBLE AND SHALL COMPLY WITH SECTION 902.

2. IN ESTABLISHMENTS WHERE SEPARATE AREAS ARE DESIGNATED FOR SMOKING AND NON-SMOKING PATRONS, THE NUMBER OF ACCESSIBLE FIXED TABLES (OR COUNTERS) SHALL BE PROPORTIONALLY DISTRIBUTED BETWEEN THE SMOKING AND NON-SMOKING AREAS.

3. WHERE FOOD OR DRINK IS SERVED AT COUNTERS EXCEEDING 34" IN HEIGHT FOR CONSUMPTION BY CUSTOMERS SEATED ON STOOLS OR STANDING AT THE COUNTER, A PORTION OF THE MAIN COUNTER WHICH IS 60" IN LENGTH MINIMUM SHALL BE PROVIDED IN COMPLIANCE WITH SECTION 305 OR SERVICE SHALL BE AVAILABLE AT ACCESSIBLE TABLES WITHIN THE SAME AREA.

4. AT LEAST 5% OF ALL TABLE SEATING SHALL BE ACCESSIBLE PER THE REQUIREMENTS OF SECTION 226.

5. ACCESSIBLE SEATING AT TABLES AND/OR COUNTERS SHALL COMPLY WITH CHAPTER 3.

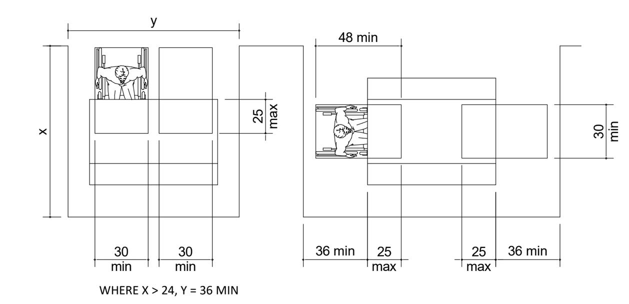

MINIMUM CLEARANCES FOR SEATING AND TABLES

ADDITIONAL ACCESSIBILITY COMPONENTS

IN ADDITION TO ALL A.D.A./A.D.A.A.G. REQUIREMENTS, THIS FACILITY SHALL MEET THE REQUIREMENTS OF THE LOCAL JURISDICTION FOR ACCESSIBILITY AS LISTED BELOW AND SHALL MEET ALL REQUIREMENTS ICC/ANSI A117.1.

* WHERE INFORMATION LISTED/SHOWN IN THIS SECTION CONFLICTS WITH THE A.D.A.A.G. INTERIOR ACCESSIBILITY COMPONENTS, THE MORE RESTRICTIVE OF THE TWO REQUIREMENTS SHALL BE FOLLOWED.

RESTROOMS

1. ELEMENTS OF ACCESSIBLE RESTROOMS SHALL COMPLY WITH ICC/ANSI A117.1 - 2009 SECTIONS 603, 604, 605, 606, AND 609.

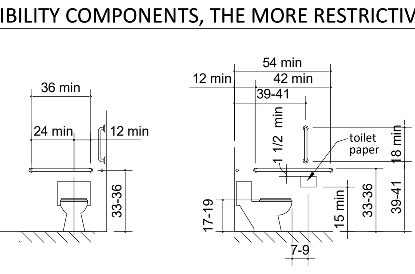

GRAB BARS AT WATER CLOSETS

DOORS

1. ACCESSIBLE DOORS SHALL COMPLY WITH ICC/ANSI A117.1 - 2009 SECTION 404.

2. THRESHOLD AT DOORWAYS SHALL NOT EXCEED 1/2" IN HEIGHT. RAISED THRESHOLDS AND FLOOR LEVEL CHANGES AT DOORWAYS SHALL BE BEVELED WITH A SLOPE NO GREATER THAN 1:2.

3. HANDLES, PULLS, LATCHES, LOCKS, AND OTHER OPERATING DEVICES ON ACCESSIBLE DOORS SHALL HAVE A SHAPE THAT IS EASY TO GRASP WITH ONE HAND AND DOES NOT REQUIRE TIGHT GRASPING, TIGHT PINCHING, OR TWISTING OF THE WRIST TO OPERATE. LEVER-OPERATED MECHANISMS, PUSH-TYPE MECHANISMS, AND U-SHAPED HANDLES ARE ACCEPTABLE DESIGNS. HARDWARE REQUIRED FOR ACCESSIBLE DOOR PASSAGE SHALL BE MOUNTED NO HIGHER THAN 48" ABOVE FINISHED FLOOR AND NOT LOWER THAN 34" ABOVE FINISH FLOOR.

4. IF A DOOR HAS A CLOSER, THEN THE SWEEP PERIOD OF THE CLOSER SHALL BE ADJUSTED SO THAT FROM AN OPEN POSITION OF 90°, THE DOOR WILL TAKE AT LEAST 5 SECONDS TO MOVE TO AN OPEN POSITION OF 12°.

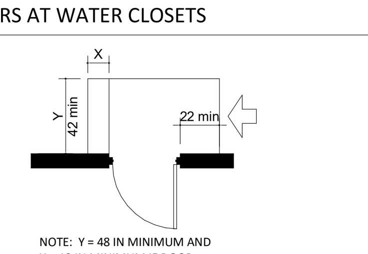

HINGE SIDE APPROACHES - SWINGING DOORS

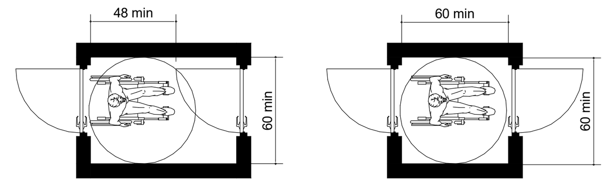

TWO HINGED DOORS IN SERIES

PATH OF TRAVEL

1. ALL WALKS, HALLS, CORRIDORS, AISLES, SKYWALKS, TUNNELS, AND OTHER SPACES THAT ARE PART OF AN ACCESSIBLE ROUTE SHALL COMPLY WITH ICC/ANSI A117.1 - 2009 SECTION 402

2. AT LEAST ONE ACCESSIBLE ROUTE SHALL CONNECT ACCESSIBLE BUILDING OR FACILITY ENTRANCES WITH ALL ACCESSIBLE SPACES AND ELEMENTS.

3. AN ACCESSIBLE ROUTE WITH A RUNNING SLOPE GREATER THAN 1:20 IS A RAMP AND SHALL COMPLY WITH ICC/ANSI A117.1 - 2009 SECTION 405. NOWHERE SHALL THE CROSS SLOPE OF AN ACCESSIBLE ROUTE EXCEED 1:48.

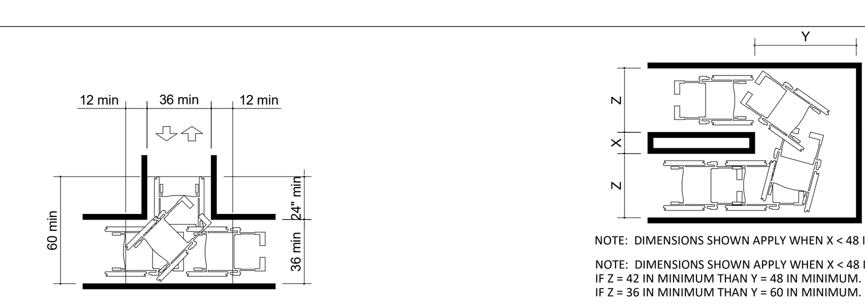

T-SHAPED SPACE FOR 180° TURNS — TURN AROUND AN OBSTRUCTION

SIGNAGE

1. ACCESSIBLE SIGNAGE SHALL COMPLY WITH ICC/ANSI A117.1 - 2009 SECTION 703.

2. LETTERS AND NUMBERS ON SIGNS SHALL HAVE A WIDTH-TO-HEIGHT RATIO SUCH THAT THE WIDTH OF AN UPPERCASE 'O' SHALL BE 55% MINIMUM AND 110% MAXIMUM OF THE HEIGHT OF AN UPPERCASE 'I'.

3. CHARACTERS AND NUMBERS ON SIGNS SHALL BE SIZED ACCORDING TO THE VIEWING DISTANCE FROM WHICH THEY ARE TO BE READ, TABLE 703.2.4. THE MINIMUM HEIGHT IS MEASURED USING AN UPPER-CASE I. LOWER CASE CHARACTERS ARE PERMITTED. SIGNS INSTALLED OVER 120" ABOVE FINISHED FLOOR SHALL HAVE A MINIMUM CHARACTER HEIGHT OF 3".

4. WHERE PERMANENT IDENTIFICATION IS PROVIDED FOR ROOMS AND SPACES, SIGNS SHALL BE INSTALLED ON THE WALL ADJACENT TO THE LATCH SIDE OF THE DOOR, INCLUDING DOUBLE-LEAF DOORS. SIGNS SHALL BE PLACED ON THE NEAREST ADJACENT WALL. MOUNTING HEIGHT SHALL BE 60" ABOVE FINISHED FLOOR TO THE BOTTOM OF HIGHEST LINE OF TEXT. MOUNTING LOCATION FOR SUCH SIGNAGE SHALL BE LOCATED SO THAT A CLEAR FLOOR AREA 18" MINIMUM BY 18" MINIMUM CENTERED ON THE TACTILE CHARACTERS IS PROVIDED BEYOND THE ARC OF ANY DOOR SWING BETWEEN THE CLOSED POSTITION AND 45 DEGREE OPEN POSITION.

Consultant:

R/A
Red/Architecture
589 W. NATIONWIDE BLVD. SUITE B
COLUMBUS, OHIO 43215 (614) 487-8770

BID DOCUMENTS ONLY NOT FOR CONSTRUCTION

COPYRIGHT 2026
ALL DRAWINGS AND SPECIFICATIONS SHALL REMAIN THE PROPERTY OF RED ARCHITECTURE LLC AND MAY NOT BE USED, DUPLICATED, OR ALTERED WITHOUT WRITTEN CONSENT OF THE ARCHITECT.

ECP PARTNERS

CMG HIGHLAND CITY SHELL, FL
TBD US 98
LAKELAND, FL 33812

Issue Record:

02/25/26	PERMIT SET
02/25/26	BID SET

Revisions:

Drawn: JLH,PH
Checked: DM,DF

Project No. EPL002

Contents:
ACCESSIBILITY REQUIREMENTS

G002

DIVISION 1 - GENERAL REQUIREMENTS

SECTION 01100 - SUMMARY

1.1 Contract Documents:

A. Contractor shall use the following Tenant provided documents in the negotiation and execution of the Work. Contact Owner's office for copies of these documents:
   1. Instructions to Bidders.
   2. Construction Contract.

B. Definitions:
   1. The term "Owner" used in these documents refers to the building Owner/Landlord.
   2. The term "Tenant" used in these documents refer to the restaurant Tenant, Chipotle Mexican Grill, Inc.
   3. The term "Contractor" used in these documents refers to the entity responsible for performing the Work under Construction Contract for Owner.

1.2 Scope of Work:

A. The Work shall include construction of the site and building facilities as shown and specified in these Specifications and Drawings.

B. When required and necessary, the Tenant will provide a subsurface exploration report as an attachment the bidding documents.

SECTION 01300 - ADMINISTRATIVE REQUIREMENTS

1.1 Coordination:

A. Immediately inform the Architect of discrepancies between the information indicated in the Contract Documents and existing project conditions, and of discrepancies between information indicated on the architectural, structural, mechanical, plumbing and electrical documents.

B. Prior to fabrication and installation of new components, field verify all existing and new dimensions and installation conditions that may affect the Work. Do not scale the drawings to establish locations of items that are not located using dimensions.
   1. All dimensions are to rough face of stud or centerline of structure, unless otherwise indicated.
   2. Verify that all Subcontractors have reviewed and coordinated locations of their equipment and furnishings exposed to view with the architectural drawings. Review questions with the Architect.

C. Coordinate new work indicated on the Contract Documents with new work that may be provided by the Owner and Tenant under separate contracts.

D. Coordinate the work of Vendors, Contractors and Subcontractors providing fixtures, furniture and equipment identified as "by Tenant" in these drawings and specifications.
   1. Notify the Tenant in timely fashion if any problems develop with the performance of these Vendors, Contractors or Subcontractors.

E. Coordinate the scheduling, sequencing, and the work of all trades and Subcontractors to assure efficient and orderly sequences of installation of interdependent construction elements.

F. Verify that the utility requirement characteristics of operating equipment are compatible with the building utility services. Coordinate work of the various specification sections having interdependent responsibilities for installing, connecting to, and placing in service such equipment.

G. Coordinate the installation and physical space requirements of plumbing, mechanical and electrical work that are indicated diagrammatically on the drawings. Follow routing shown for piping, ducts and conduit as closely as practical. Install runs parallel with and perpendicular to the line of the building. Utilize spaces as efficiently as possible to maximize accessibility for other work installation and for maintenance and for repair.
   1. Conceal piping, ducts and conduit within the construction, except as otherwise indicated.
   2. Coordinate locations of registers, fixtures and outlets with finish elements.

H. Coordinate completion and cleanup work of all trades and Subcontractors in preparation for Substantial Completion.

I. To minimize disruption of Tenant's activities after Tenant occupancy of the property, coordinate access to the property with the Tenant's Construction Manager for correction of defective work and work not in accordance with the Contract Documents.

1.2 Submittals:

A. Only when indicated in the specifications or drawings submit shop drawings, product data, and/or samples to the Architect, Design Manager, and Development Analyst for review. All submittals shall be made directly to the Architect by the general contractor. Only submittals for specified products will be accepted unless prior approval has been obtained for a substitution (refer to Section 01630).

Shop drawings: Submit electronic copies of each sheet of drawings. Shop drawings are original drawings prepared by the subcontractor or vendor for the purpose of conveying information to the Architect and/or Engineer on how a building element or product will be constructed in sufficient detail for the Architect and/or Engineer to determine compliance with the design intent.

In all cases one copy of the submittal shall be returned to the General Contractor. Electronic submittals for shop drawing or product data in either PDF or DWF format are acceptable for review. All submittals, regardless of format, must bear the General Contractor's stamp indicating the submittal has been reviewed and approved. Any submittal not meeting the requirements set forth will be rejected by the Architect.

Submittals shall be made with respect to the construction schedule to allow for adequate review time: allow (5) business days for review of submittals for any structural steel, canopies and trusses and allow (3) business days for review of submittals in all other divisions. Review timeline will commence from the time the submittal with General Contractor's approval stamp is received by the Architect, Design Manager, and Development Analyst.

1.3 Requests For Information

A. In the event that the general contractor, or a subcontractor, at any tier, determines that some portion of the drawings, specifications, or other contract documents requires a clarification or interpretation by the architect, the general contractor shall submit a Request For Information in writing to the architect in an electronic copy.

Requests for Information may only be submitted by the general contractor and may only be submitted to the architect. The general contractor shall clearly and concisely set forth the issue for which clarification or interpretation is sought and why a response is needed from the architect or the architect's consultants. In the Request for Information, the general contractor shall set forth an interpretation or understanding of the requirement along with an explanation of why such an understanding was reached.

B. The architect will review all Requests for Information to determine whether they are Requests for Information within the meaning of this term. If the architect determines that the document is not a request for information, it will be returned to the general contractor, un-reviewed as to content, for re-submittal in the proper form and in the proper manner.

Responses to Requests for Information shall be issued upon receipt, but no later that five (5) working days of receipt of the Request from the general contractor; unless the architect determines that a longer amount of time is necessary to provide an adequate response. If a longer amount of time is determined necessary by the architect, the architect will, within five (5) working days of receipt of the Request, notify the general contractor of the anticipated response time. If the general contractor submits a Request for Information on an activity with five (5) working days or less of float on the current project schedule the general contractor shall not be entitled to any time extension due to the time it takes the architect to respond to the Request provided that the architect responds within the parameters set forth above.

C. Responses to Requests for Information from the architect will not change any requirements of the contract documents. In the event that the general contractor believes that a response to a Request For Information will cause a change to the requirements of the contract documents, the general contractor shall immediately give written notice to the architect and the tenant stating that the general contractor considers the response to be a Change Order. Failure to give such written notice immediately shall waive the general contractor's (or any subcontractor's) right to seek additional time or cost under the Administrative Requirements of these contract documents.

SECTION 01400 - QUALITY REQUIREMENTS

1.1 Regulatory Requirements:

A. Perform all work in accordance with applicable local, state, and federal building codes, plumbing codes, mechanical codes, electrical codes, ordinances and rules and regulations governing food service establishments.

B. Comply with local, state and federal requirements governing accessibility.

C. Obtain all required demolition and erosion control permits required by authorities having jurisdiction.

1.2 Quality Control:

A. Maintain quality control over manufacturers, suppliers, products, services, site conditions and workmanship, to produce work of specified quality.

B. Comply with manufacturer's instructions and applicable trade standards.

C. Handle, install, connect, clean, condition and adjust products in strict accordance with manufacturer's instructions and complying with specified requirements.
   1. Request clarification from the Architect before proceeding, where manufacturer's instructions conflict with the Contract Documents.

D. Comply with specified standards as a minimum quality for the Work, except when more stringent tolerances, codes or specified requirements indicate higher standards or more precise workmanship.

E. Perform work by persons qualified to produce workmanship of the specified quality. Secure products in place with positive anchorage devices designed, sized and installed to withstand stress, vibration, physical distortion or disfigurement.

F. All dimensions shall be considered "hold-to" dimensions unless indicated otherwise (e.g. minimum or maximum dimensions.)

1.3 Testing:

A. Employ and pay for the services of an independent testing laboratory to perform inspections, tests and other services when required.

B. Include inspection and tests as indicated in the specification sections, drawings, and as required by authorities having jurisdiction.
   1. Test concrete in accordance with Section 03300 and drawing requirements.
   2. Test structural steel in accordance with Section 05110 and drawing requirements.

SECTION 01500 - TEMPORARY FACILITIES AND CONTROLS

1.1 Provide temporary facilities and controls as shown and specified:

A. Codes and Standards: Provide temporary construction facilities and controls complying with all applicable local, State and Federal local laws, regulations and codes and utility company requirements.

B. Temporary Heating, Ventilating and Cooling:
   1. Provide, pay for and maintain all temporary heating, ventilating and cooling equipment and facilities required during the progress of the work to protect materials, finished work, and equipment against damage from low and high temperatures and humidity.
   2. Provide temporary heating, ventilating and cooling when the outside temperature and humidity is low/high enough to damage or affect in any way the performance or quality of material and product stored in the building, in any temporary storage area, or any material or product incorporated into the work.
   3. Provide temporary heating, ventilating and cooling when the outside temperature and humidity is low/high enough to significantly slow or hamper effectiveness of workers and to provide suitable working conditions.

C. Temporary Electrical Lighting and Power:
   1. Provide, pay for and maintain all temporary electrical service for lighting and power required during the progress of the work. Include all necessary wiring, fuses, disconnect switches, safety devices, junction boxes, panels, ground fault protections, and transformer if required. Include cost for providing temporary electric generators in the Contract Sum, if temporary electric service is not available for use during progress of the work.
   2. Temporary service and lighting and power items and installations shall conform to the requirements of the NFPA National Electric Code and OSHA Occupational Safety and Health Act of 1970.

D. Water: Provide, pay for and maintain all temporary water required during the progress of the work. Include all necessary storage tanks, piping, valves, fittings, hose and hose connections during construction and testing.

E. Temporary Toilets: Provide, pay for and maintain temporary toilet facilities for use by the Contractor, Contractor's employees and all Subcontractors and Subcontractors' employees. Comply with all local requirements for installation, use and maintenance of temporary toilet facilities.

F. Barriers and Enclosures:
   1. Provide temporary construction barriers in accordance with project requirements. Exercise all necessary precautions to protect adjacent properties, outside project contact limits, during progress of the work. Take special precautions to avoid damage to existing overhead and underground utilities and services owned or operated by the Owner or by public or private utility companies.
   2. Provide temporary weather-tight enclosures at exterior openings to provide acceptable working conditions and protection of materials and to allow for temporary heating, ventilating and cooling.

G. Field Office, Telephone and Email:
   1. Provide and maintain a temporary field office at the project site during progress of the work. A designated area within the existing building will be available for use as a temporary field office. Verify area size and location with the Tenant.
   2. Maintain copies of permits, approved shop drawings, specifications, addenda and record documents at field office.
   3. Provide temporary telephone service and internet service with email and photo capabilities to field office throughout progress of the work.
   4. Provide weekly photographic documentation of project progression to Tenant.

H. Safety and Security
   1. Provide and maintain all necessary safety provisions for protection and safety of the project work, workers and general public.
   2. Provide and maintain operable fire extinguishing devices in well-marked, accessible locations throughout the project. Provide types, quantities and locations in compliance with governing codes and ordinances.
   3. Provide all necessary security barriers and enclosures to protect the work and Tenant's operations from unauthorized entry of persons, vandalism and theft. Provide doors, when required, with self-closing hardware and locks.

I. Cleaning
   1. During Construction: Provide an approved on-site container for the use of all Contractors and Subcontractors for the collection of waste materials, debris and rubbish. Execute periodic cleaning to keep the work, the site and adjacent properties free from accumulations of waste materials, rubbish and windblown debris, resulting from construction operations. Remove crates and cartons in which materials, equipment, or fixtures are received to on-site containers daily.
      a. Maintain the property in a clean and orderly condition. Remove waste materials, debris and rubbish from the site on a daily basis and dispose of at legal disposal areas away from the site.
   2. Dust Control:
      a. Remove debris and rubbish from pipe chases, plenums and other similar closed or remote spaces prior to covering or enclosing the space.
      b. Sweep and vacuum clean interior surfaces before start of surface finishing and painting. Continue cleaning on an as-needed basis until finishing and painting is completed.
      c. Cleaning operations shall be acceptable to the Tenant's Construction Manager.

SECTION 01630 - SUBSTITUTIONS

1.1 General:

A. Products, including materials, equipment and systems described in the Contract Documents establish the standards of required function, dimension, appearance, quality and performance of the Work. Base all bids on the "Standards" indicated.

B. Requests by the Contractor for changes in products, manufacturers, fabricators, suppliers, installers, and methods of construction required by the Contract Documents are considered requests for "substitutions:" Substitutions will be considered only under the following conditions:
   1. The indicated "Standard" cannot be provided within the Contract Time
   2. The indicated "Standard" cannot receive necessary approval by the governing authority.
   3. A substantial advantage is offered the Owner, in terms of cost, time, energy conservation or other considerations of merit as determined by the Architect.

C. Submit each request for substitution to the Architect. Identify the product, manufacturer, fabricator, supplier, installer or the fabrication or installation method to be replaced in each request. Identify related Specification Section and Drawing numbers. Provide documentation as directed by the Architect.

D. Substitutions will not be considered when indicated on shop drawings or product data submittals without separate written request, when requested directly by subcontractor, manufacturer, fabricator, or supplier, or when acceptance will require substantial revision of the Contract Documents.

E. Substitute products, manufacturers, fabricators, suppliers, and installers shall not be used for the Project without Tenant and Architect's written acceptance.

SECTION 01700 - EXECUTION REQUIREMENTS

1.1 Preparation:

A. Protection of existing construction: Use all necessary care and appropriate means and methods to protect and prevent damage to existing construction and property not part of the Contract Work. Repair and refinish or replace construction an property damaged during construction work, at Contractor's expense.

1.2 Selective Demolition: Provide selective demolition as shown and specified.

A. Preparation:
   1. Coordinate work of this Section with work of various Contractors and Tenant's staff.
   2. Maintain protected access at all times.
   3. Erect and maintain weatherproof closures at exterior openings.
   4. Erect and maintain dust-proof interior partitions to prevent spread of dust or fumes.
   5. Erect and maintain barricades, enclosures, bracing, shoring, lights, warning signs and guards necessary for worker and public safety and protection of property.
   6. Disconnect, remove and cap designated utility services. Identify and mark locations of disconnected and capped utilities at the project site and on Project Record Documents.
   7. Notify and coordinate with the Tenant's Construction Manager and the building Owner for any demolition occurring outside the lease limit.
   8. Coordinate hours of operation and construction access with the Tenant's Construction Manager and the building Owner.

B. Selective Demolition
   1. Remove existing construction to accommodate new construction as indicated.
   2. Perform selective demolition in an orderly, systematic and careful manner with least possible disturbance to public and adjacent property. Use of explosives is prohibited.
   3. Immediately remove from the site and legally dispose of demolished materials, except as indicated otherwise. Do not burn or bury materials on the project site.

1.3 Cleaning

A. Final Cleaning: Perform final cleaning upon completion of project work.
   1. Remove waste and surplus materials, rubbish, tools, equipment and temporary construction facilities from the site.
   2. Clean exterior grounds; remove stains, spills and foreign materials from paved areas, power wash and sweep clean. Rake clean landscaped surfaces of the grounds.
   3. Remove temporary protection and labels not required to remain.
   4. Clean all finished surfaces. Remove grease, mastic, adhesives, dust, dirt, stains, fingerprints, labels and other foreign materials from exposed interior and exterior surfaces.
      a. Clean all plumbing, fire protection and electrical fixtures and equipment including ceiling area elevated ductwork and lighting fixtures.
      b. Clean permanent equipment filters and replace temporary disposable filters in mechanical units used during construction.
      c. Clean ducts, blowers and coils if mechanical units were operated without filters during construction.
   5. Clean interior and exterior glazing and mirrors, polish transparent and glossy surfaces and clean floors with appropriate materials and equipment.
   6. Remove waste, foreign material and debris from roofs, areaways and drainage systems.
   7. Before Tenant occupancy, conduct an inspection, with the Tenant, of exposed interior and exterior surfaces at all work areas, to verify that the entire work is clean.

1.4 Starting and Adjusting:

A. Prior to Substantial Completion, coordinate the start-up, test and balance, placement in operation and adjustment all systems, controls and equipment to verify proper operation. All systems shall be complete and operating prior to final inspection.

1.5 Contract Closeout:

A. Operation and Maintenance Data: Submit one operation and maintenance manual, bound in 8-1/2" x 11" text pages, three D side ring capacity expansion binders with durable plastic covers.
   1. Subdivide the binder contents internally with permanent dividers logically organized as described below. Provide tab titles clearly printed under reinforced laminated plastic tabs.
   2. Provide a table of contents with each product or system description identified.
   3. Provide a directory listing names, addresses, and telephone numbers of the project Architect/Engineer, Contractor, Subcontractors and major equipment suppliers.
   4. Prepare operations and maintenance instructions arranged by system and subdivided by specification section. Identify names, addresses, and telephone numbers of project Subcontractors and suppliers. For each category, identify the following:
      a. Significant design criteria.
      b. List of equipment.
      c. Parts list for each component.
      d. Operating instructions.
      e. Maintenance instructions for each equipment item and systems.
      f. Maintenance instructions for special finishes, including recommended cleaning methods and materials and special precautions for identifying detrimental agents.
   5. Submit operations and maintenance data to the Tenant with final application for payment in accordance with Exhibit C of the Construction Contract.

B. Record/As Built Documents:
   1. Prepare and maintain on site one set of the following record/as built documents:
      a. Contract Documents.
      b. Construction Documents.
      c. Change orders and other modifications to the Contract.
      d. Shop drawings, product data, and samples.
      e. Construction schedule.
   2. Store record/as built documents separate from documents used for construction.
   3. Record actual revisions to the Work, concurrently with construction progress.
   4. Legibly mark and record a description of actual products installed at each specification section, including the following:
      a. Manufacturer's name and product model and number.
      b. Approved product substitutions or alternates utilized.
      c. Changes made by addenda, change orders, and other modifications.
   5. Legibly mark each item to record actual construction, including the following:
      a. Measured depths of foundations in relation to finish first main floor datum.
      b. Measured horizontal and vertical locations of underground utilities and appurtenances, referenced to permanent surface improvements.
      c. Measured locations of internal utilities and appurtenances concealed in construction, referenced to visible and accessible features of the work.
      d. Field changes of dimension and detail.
      e. Details not on original Contract Document drawings.
   6. Submit record/as built documents to the Tenant with final application for payment in accordance with Exhibit C of the Construction Contract.

C. Warranties and Bonds:
   1. Compile warranties and bonds required by the Contract Documents.
   2. Submit duplicate copies of warranties and bonds to the Tenant with final application for payment in accordance with Exhibit C of the Construction Contract.

D. Maintenance Materials and Spare Parts:
   1. Provide extra maintenance materials and spare parts in quantities indicated in the specification sections.
   2. Place in location as directed by the Tenant's Construction Manager.

DIVISION 2 - SITE CONSTRUCTION

1.1 General: Provide site construction work, including services, utilities, earthwork, paving and landscaping in accordance with the site construction work drawings and details.

2.1 Materials:

A. Stencils for pavement markings: Pavement Stencil Comapny, P: (800) 250-5547, stencils@pavementstencil.com

DIVISION 3 - CONCRETE

SECTION 03300 - CAST-IN-PLACE CONCRETE

1.1 General: Provide cast-in-place concrete work in accordance with the General Structural Notes, structural drawing and details. Follow shell building documents for specifications, joints and geotech.

A. Standards: Materials and construction shall conform to the following:
   1. ACI 117 "Standard Tolerances for Concrete Construction and Materials."
   2. ACI 301 "Structural Concrete for Buildings."
   3. ACI 305R "Recommended Practice for Hot Weather Concreting."
   4. ACI 306R "Recommended Practice for Cold Weather Concreting."
   5. ACI 315 "Details and Detailing of Concrete Reinforcement."
   6. ACI 318 "Building Code Requirements for Reinforced Concrete."

2.1 Materials:

A. Under Slab Vapor Retarder: Stego Industries LLC, 877-464-7834, internet www.stegoindustries.com high density polyethylene Stego Wrap (10 mil) Vapor Barrier meeting or exceeding ASTM E1745 performance criteria for Class C vapor retarders.
   1. Seam Tape: High density polyethylene tape with pressure sensitive adhesive.
   2. Pipe boots: Shop or site fabricated from vapor retarder material and seam tape.

B. Concrete:
   1. Portland Cement: ASTM C150, Type I
   2. Aggregate: ASTM C33.
   3. Water: Clean and potable.
   4. Reinforcement: When required, comply with drawings reinforcement requirements.
   5. Compressive Strength: Minimum 3000 psi at 28 days.
   6. Admixtures: All admixtures shall be approved by the Tenant's Construction Manager prior to placement in the concrete mix.

C. Topping Concrete: When required to suit installation conditions, Ardex Diama-Top of Ardex Engineered Cements (888) 512-7339, internet www.ardex.com
   1. ULTRAFLOR ARDEX DIAMA-TOP, self-leveling concrete repair material.
   2. Any pinholes that need to be filled shall be filled with ARDEX DIAMA-FILL filling compound for polished concrete, concrete terrazzo and other cementitious wear surfaces applied at the appropriate time during the polishing process.
   3. The primer for areas to receive ARDEX DIAMA-TOP will be ARDEX EP 2000 Substrate Preparation Epoxy.
   4. Installation shall be performed by factory-trained professional applicators in strict accordance with manufacturer's installation instructions.

3.1 Installation

A. Vapor Retarder: Place, protect and repair vapor retarder sheets in accordance with ASTM E1643 and manufacturer's installation instructions.
   1. Provide a single layer of vapor retarder material over level compacted slab base.
   2. Lap joints and seams 6 inches and seal with seam tape.
   3. Seal all penetrations and repair damaged areas before concrete placement.

B. Reinforcement Place and inspect all reinforcing steel before concrete is placed.

C. Concrete Placement:
   1. Place cast-in-place concrete in accordance with ACI 301 and ACI 305R and 306R recommended practices for hot weather and cold weather concreting. Do not place concrete when temperature is below 40 degrees F.
   2. Wet cure concrete in accordance with ACI 301, using moist curing or moisture-retaining covers

D. Finish: Except where additional floor finish is scheduled, provide a smooth steel trowel finish.
   1. Exposed concrete used as a finish floor surface shall have a smooth finished surface, uniform in texture and appearance and free of trowel marks and other defects affecting ease of maintenance.
   2. Grind smooth surface defects as directed by the Tenant's Construction Manager.

E. Testing: When required, comply with drawings and specification sections testing requirements.

F. Topping Concrete: Prepare concrete floor slab substrate surfaces, prime substrate surfaces, mix, install and finish topping concrete in accordance with manufacturer's application instructions.

~~NOT USED~~

~~SECTION 03680 - RESINOUS FLOORING~~

1.1 General: Section includes: Decorative resinous flooring systems.

1.2 System Description:

A. Performance Requirements: Provide resinous flooring that has been manufactured and installed to maintain performance criteria stated by manufacturer without defects, damage or failure.
B. Alternate Flooring Options as approved by CMG DM: AIFlooring TerraQuartz (color: salt & pepper) -or- AIFlooring TerraSeal (color: medium grey)

1.3 Quality Assurance:

A. Qualifications:
   1. Installer Qualifications: Installer experienced in performing work of this section who has specialized in installation of work similar to that required for this project.
      a. Installer shall be an established company with at least 3 years experience in the installation of polymer floors.
      b. Contractor shall demonstrate the ability to undertake and complete the required work and furnish documentation regarding the successful completion of projects of similar size and complexity.
   2. Manufacturer Qualifications: Manufacturer shall be capable of providing technical support, qualified applicators, and approval of application methods.

B. Pre-installation Meetings: Conduct a pre-installation meeting to verify flooring system specifications (color, texture, etc.), substrate analysis, and manufacturer's installation instructions.

C. Pre-installation Testing: Conduct pre-installation testing as follows:
   1. Water Vapor Transmission: Calcium Chloride tests should be conducted to determine the amount of water vapor coming through the slab. The results should be compared to limitations set forth by the manufacturer.
   2. Core Sample Testing: (optional) Core samples should be taken and analyzed if the installer believes there to be a problem with the integrity of the substrate that may affect flooring system performance.

1.4 Delivery, Storage & Handling:

A. Ordering: Comply with manufacturer's ordering procedures and allow for enough lead-time for custom blends so as not to interfere with construction schedules.

B. Delivery: Deliver materials in manufacturer's original, unopened, undamaged containers with identification labels intact.

C. Storage and Protection: Store materials where they are protected from direct sunlight and harmful weather conditions. Meet manufacturer's condition for temperature, humidity, etc.

1.5 Project Conditions:

A. Environmental Requirements/Conditions: Substrate and ambient air temperatures shall be in accordance with manufacturer's requirements.

B. Temperature Requirements: Maintain air temperature in spaces where products will be installed for time period before, during and after installation as recommended by manufacturer.

Consultant:

R/A

Red Architecture

589 W. NATIONWIDE BLVD. SUITE B
COLUMBUS, OHIO 43215 (614) 487-8770

BID DOCUMENTS ONLY NOT FOR CONSTRUCTION

COPYRIGHT 2026
ALL DRAWINGS AND SPECIFICATIONS SHALL REMAIN THE PROPERTY OF RED ARCHITECTURE LLC AND MAY NOT BE USED, DUPLICATED, OR ALTERED WITHOUT WRITTEN CONSENT OF THE ARCHITECT.

ECP PARTNERS

CMG HIGHLAND CITY SHELL, FL
TBD US 98
LAKELAND, FL 33812

Issue Record:

02/25/26	PERMIT SET
02/25/26	BID SET

Revisions:

Drawn: JLH,PH

Checked: DM,DF

Project No. EPL002

Contents:

ARCHITECTURAL SPECIFICATIONS

G010

2.1 Materials:

A. Resinous Flooring: Manufacturer: aiflooring
1. Contact: 1218 West 41st Street, Suite B, Tulsa, Oklahoma 74107. Phone: 918-445-0627

2.1 Flooring System:

A. System Description: Clear, thin film system 18-22 mils thick with texture agent added for slip resistance.
1. TerraPrime: A 2 component, 100% solids clear polyamide-cured epoxy coating.
2. TerraThane Satin: A 2 component, 90% solids polyurea clear finish coat.
3. TerraGrip: A graded, plastic aggregate added to finish coat for slip resistance.

2.3 Product Substitutions:

A. Substitutions: No substitutions permitted.

2.4 Source Quality:

A. Source Quality: Obtain resinous materials, including patching and leveling materials from a single manufacturer.

3.1 Manufacturer's Instructions:

A. Compliance: Comply with manufacturer's product data, including product technical data sheets and application instructions.

3.2 Examination:

A. Site Verifications of Conditions: Verify substrate conditions, which have been previously installed under other sections, are acceptable for product installation in accordance with manufacturer's instructions.
1. Before applying materials, inspect surfaces to receive new materials and report any unsatisfactory conditions. Absence of any such report shall constitute installer's acceptance of surfaces as satisfactory for installing materials.

3.3. Preparation:

A. Adjacent Surfaces Protection: Protect adjacent work areas and finish surfaces from damage during product installation.

B. Surface Preparation:
1. Mechanical Cleaning: Concrete floor surfaces receiving polymer flooring systems shall be thoroughly cleaned and prepared by shotblasting and/or diamond grinding.
2. Patching Damaged Substrate: Holes, voids, static cracks, and other substrate surface defects should be patched and repaired according to manufacturer's recommendations.
3. Prepare and clean control joints well and fill with an appropriate elastomeric.

3.4 Installation:

A. Resinous Flooring Installation: The following are abbreviated guidelines that should provide for basic application steps for the installation of the systems. Detailed instructions should be obtained from the manufacturer.
1. Patching: After substrate preparation, surface defects shall be patched according to manufacturer's recommendations.
2. Priming: Apply aiflooring TerraPrime, 100% solids epoxy primer, at a rate of 125-150 square feet per gallon. Allow 6-12 hours (depending on temperatures) of cure before applying finish coat. Finish coat must be applied within 24 hours of TerraPrime application.
3. Finish Coat: Apply aiflooring TerraThane Satin, 90% solids polyurea topcoat, at a rate of 200 square feet per gallon. TerraGrip should be added to the TerraThane mix at a rate of 1 pint per 3 gallon kit for slip resistance. Note that TerraThane Satin must be metered out by notched squeegee prior to rolling.

B. Cleaning: Remove temporary coverings and protection of adjacent work areas. Repair or replace damaged installed products. Clean installed products in accordance with manufacturer's instructions prior to Owner's acceptance. Remove construction debris from project site and legally dispose of debris.

3.5 Protection:

A. Protection: Protect installed product and finish surfaces from damage during construction.

SECTION 03350 - CONCRETE SEALING AND POLISHING

NOT USED

1.1 General: Provide a sealed and polished concrete floor finish as shown and specified.

A. Standards
1. American Society for Testing and Materials:
a. ASTM-C779, Standard Test Method for Abrasion Resistance of Horizontal Concrete Surfaces.
b. ASTM G23-81, Ultraviolet Light & Water Spray
c. ASTMC805, Impact Strength
2. American Concrete Institute
a. ACI 302. 1R-89, Guide for Concrete Floor and Slab Construction

B. Submittals: Provide the following:
1. Manufacturer's product data, specifications and installation instructions. Include Material Safety Data Sheets (MSDS) and identify application requirements, curing time and safety requirements.
2. Certified test reports, prepared by an independent testing laboratory, confirming compliance with performance criteria.
3. Manufacturer's certification that installer is a certified applicator of special concrete floor finishes, and familiar with manufacturer's installation procedures and requirements for the specified sealed and polished concrete floor finish.
4. Manufacturer's and installer's written acceptance of substrate surface and installation conditions.

C. Quality Assurance:
1. Installer Qualifications:
a. Use a certified installer and adequate number of skilled workmen who are thoroughly trained and experienced in the necessary craft.
b. The special concrete finish manufacturer shall certify the applicator.
c. Applicator shall be familiar with the specified requirements and the methods needed for proper performance of work of this section. Applicator shall have not less than three years successful experience installing sealed and polished floor finishes similar to those required for this project.
d. Provide a letter of certification from special concrete finish manufacturer stating that installer is a certified applicator and is familiar with proper procedures and installation requirements required by the manufacturer.
2. Protection: Contractor shall provide all necessary materials, means, methods and procedures acceptable to the floor finish manufacturer and required to protect the concrete floor surface and provide a suitable substrate for the installation of the specified sealed and polished concrete floor finish.

D. Project Conditions:
1. Comply with the floor finish manufacturer's environmental limitations for substrate temperature and moisture content, ambient temperature, and humidity, ventilation and other conditions affecting the special floor finish performance.
a. Concrete must have an average Floor Flatness rating of at least 40.
b. Concrete must have an average Floor Leveliness rating of at least 40.
c. Concrete must be cured a minimum of 28 days or as directed by the manufacturer before application of RetroPlate can begin. Wet cure of the concrete is preferred. No concrete sealer is necessary.
d. Application of RetroPlate shall take place prior to installation of equipment, thus providing a complete, uninhibited concrete slab for application.
2. Before general sealer/hardener application, prepare and coat a jobsite test area of size acceptable to the Architect, to verify and approve proper surface preparation, application techniques and coverage rate.
3. Close finished floor areas to traffic during floor finish application and after application for time period directed by the floor finish manufacturer.
4. The completed RetroPlated slab will be covered to prevent damage by the other trades during store completion.

2.1 Materials

A. Hardening/ Sealing Agent
1. RetroPlate 99 manufactured by Advanced Floor Products Inc. (801) 812-3420 www.retroplatesystem.com
2. RetroGuard Stain Inhibitor
3. Joint Filler: CreteFill Pro 75. Two component 100% solids non-staining Polyurea Elastomer.
4. Spall Repair: Multiple minor surface defects and irregularities: Crete Fill Spall Repair: High Strength hybrid urethane, two part 100% solids.
5. Coefficient of friction for Retroguard finish shall not be lower than .40.
6. Manufacturer's Representative: Contact Scott Maxfield at RetroPlate for a list of Certified Applicators (888)942-3144 scott.maxfield@retroplatesystem.com

3.1 Installation

A. Surface Conditions
1. Examine substrate, with installer present, for conditions affecting performance of finish. Correct conditions detrimental to timely and proper work. Do not proceed until unsatisfactory conditions are corrected.
2. Verify that base slab meets finish and surface profile requirements in Division 3 Section "Cast-In-Place Concrete," and Project Conditions above.
3. Prior to application, verify that floor surfaces are free of construction latents.

B. Application
The following RetroPlate process will be followed as listed below:
A concrete grinding machine must be used. Please proceed accordingly. The process is as follows:
1. Floors should be started using 50, 80 or 100 grit diamond pucks depending on the condition of the slab.
2. Clean the floor using automatic scrubber or comparable.
3. Grind floor using 200 grit resin diamonds.
4. Clean the floor using automatic scrubber or comparable.
5. Apply RetroPlate 99 to floor at 200 sq. ft. per gallon, scrubbing product into the floor and allowing product to soak until turning slick. If it becomes sticky, apply water to the surface as necessary, leaving the product on the floor for at least 60 minutes.
6. Grind floor using 400 grit resin diamonds.
7. Clean the floor using automatic scrubber or comparable.
8. Clean and remove any excess RetroPlate. Let the floor dry overnight.
9. Continue the polishing process using 800 grit resin diamonds.
10. Clean the floor using automatic scrubber or comparable.
11. Alternately, depending on slab condition, grind floor using 1200-1500 grit resin diamonds.
12. Clean the floor using automatic scrubber or comparable.
13. The same process will be used for new floors as well as rehab floors. Floor prep for the rehab floors will be separate.
14. Apply an even coat of RetroGuard Sealer with a brush, roller, or low-pressure sprayer, and when surface is dry, burnish the floor with a black burnishing pad. Apply a second coat of RetroGuard one hour after the initial application, and again burnish the floor with a black burnishing pad.
15. Do not walk on surface for 12 hours, and do not introduce any water or moisture for at least 48 hours, allowing for proper drying and setting of RetroPlate and RetroGuard. Water will minimize the sealing properties of RetroPlate and RetroGuard.

C. Start any of the floor finish applications in presence of manufacturer's technical representative.

D. Sealing, Hardening and Polishing of Concrete Surface
1. Concrete must be in place a minimum of 28 days or as directed by the manufacturer before application can begin.
2. Application is to take place at least 10 days to the prior to racking and other in-store accessory installation, thus providing a complete, uninhibited concrete slab for application.
3. Only a certified applicator shall apply RetroPlate 99. Procedures must be followed as recommended by the product manufacturer and as required to match approved test sample.
4. Achieve waterproofing, hardening, dust-proofing, and abrasion resistance of the surface without changing the natural appearance of the concrete, except for the sheen.
5. Polish to a level 2 shine.

E. Workmanship and Cleaning
1. The premises shall be kept clean and free of debris at all times.
2. Remove spatter from adjoining surfaces, as necessary.
3. Repair damages to surface caused by cleaning operations.
4. Remove debris from jobsite
a. Dispose of materials in separate, closed containers in accordance with local regulations.

DIVISION 4 - MASONRY

SECTION 04810 - UNIT MASONRY ASSEMBLIES

1.1 General: Provide unit masonry assemblies as shown and specified.

A. Standards: Materials and construction shall conform to the following:
1. ACI 530.1-02/ASCE 6-02/TMS 602-02 "Specifications for Masonry Structures."
2. NCMA "TEK Bulletins."
3. BIA "Technical Notes on Brick Construction."

2.1 Materials:

A. Concrete Masonry Units (CMU): Size and thickness as shown on drawings.
1. ASTM C 90, load-bearing, normal weight, natural color CMU, properly cured at time of delivery, linear shrinkage not to exceed 0.065%.
2. Provide special shapes where required.
3. Provide exterior wall CMU containing an integral polymeric water-repellent admixture.
a. Manufacturer: W. R. Grace "Dry-BlockR System Block Admix ".

B. Face Brick:
1. Manufacturer:
a. Endicott, (402) 729-3315, www.endicott.com (Iron Spot Brick), or as approved by architect
b. Belden Brick Company, (330) 451-2031, www.beldenbrick.com (White Brick), or as approved by architect
2. Type: "Face Brick C216" complying with ASTM C216, Grade SW, Type FBS. No efflorescence when tested in accordance with ASTM C67.
3. Size: Modular size, laying three courses to 8" vertically.
4. Color: "Alaska White Velour" or "Manganese Ironspot, Velour" as noted on Exterior Elevations
5. Provide special shapes where required.

C. Mortar Materials:
1. Portland cement: ASTM C150, Type I or III, natural color.
2. Masonry cement: ASTM C91, Type indicated, natural color.
3. Aggregate: ASTM C144, clean masonry sand.
4. Water: Clean, fresh and potable.
5. Provide all exterior wall masonry mortar containing an integral polymeric water-repellent admixture.
a. Manufacturer W. R. Grace, "Dry-BlockR Integral Water-Repellent Mortar Admixture".

D. Unit Masonry Mortar Mixes: ASTM C270 proportions by volume.
1. Face brick: Type N mortar.
2. Dye:
a. SGS #60A "White" by Solomon Grind Services (White)
b. SM #750 "Silverstone" by Spec Mix (Iron Spot)

E. Reinforced Unit Masonry Grout Mixes
1. Concrete fill: ASTM C94 3,000 psi concrete.

F. Joint Reinforcement, Wall Ties And Anchors: Finish, ASTM A-153 hot-dip galvanized
1. Manufacturer: Hohman & Barnard, INC.
2. Horizontal joint reinforcement: Welded ladder type with matching corners and Tee units.
a. Single Wythe masonry: Standard single 9 gage side and cross rods. H&B - #220 Ladder-Mesh.
3. Anchoring devices: Provide strap anchors, inserts, bolts and rods of type and size indicated.
a. CMU to CMU: Strap anchors 1/4" x 1-1/4" x 24" steel with bent ends.
b. CMU to structural steel: H&B - VBT - Vee Byne-Tie With Plain Steel (Tie) Used In Conjunction With H&B #359 Weld-on Ties (Anchor Rods).
4. Masonry Veneer To Woof Framing: H&B - DW-10HS Veneer Anchor, With Adjustable 3/16" Cold-Drawn Steel Wire Tie Sections and 14 GA. Screw-On Attachment Plate.
a. Fasteners: Self-Drilling, Self-Tapping Screws, 1-1/4" X #10, Corrosion-Resistant Coated. Provide Two (2) Screw Fasteners for each Attachment Plate.
5. Seismic Masonry Veneer to Wood Framing: (When Required) H&B Seismic Plate Pintle HB-213S with HB-213 (T-Lok Tie)
a. Fasteners: Seld-Drilling, Self-Tapping Screws, 1-1/4" X #10, Corrosion-Resistant Coated. Provide Two (2) Screw Fasteners For Each Attachment Plate.

G. Concealed Masonry Through-Wall Flashing: W. R. Grace "Perm-A-Barrier" self-adhering modified bituminous sheet, 40 mils thick.
1. Termination Mastic: W.R. Grace "Bituthene Mastic."
2. Primer: W.R. Grace "Bituthene P-300 Primer."
3. Termination bars: Extruded aluminum or stainless steel, 1" wide and .098" thick pre-punched at 6" on center, secured with stainless steel drive pins.

H. Accessories
1. Reinforcing bars: ASTM A615, Grade 60, deformed billet steel bars of sizes indicated.
2. Wall weeps: Dur-O-Wal D/A 1006 "Cell Vent", clear flexible polypropylene co-polymer.
3. Compressible joint material: Dur-O-Wal "Rapid Soft-Joint" D/A 2010.
4. Bond breaker strips: ASTM D226 No. 15 asphalt saturated roofing felt.
5. Cleaning agents:
a. Face Brick and CMU: ProSoCo, Inc., "Sure Klean New Masonry Cleaners."
b. ACMU: ProSoCo, Inc., "Sure Klean Burnished Custom Masonry Cleaner."
6. Expansion/Control joint sealants: Polyurethane-based, elastomeric joint sealant complying with ASTM C920 and Section 07900 requirements. Color matched to adjacent surfaces.

3.1 Installation

A. Preparation
1. Wet absorbent face brick masonry units requiring wetting, in accordance with BIA recommendations.
2. Lay concrete masonry units dry.
3. Establish, lines, levels and coursing. Ensure ties, anchors and flashing are correctly installed
4. Mix mortar cementitious materials and aggregate in a mechanical mixer. Add water in amount to provide satisfactory workable consistency of mortar. Retemper mortar as required within two hours of mixing to replace water lost be evaporation. Discard mortar after two and one-half hours of initial mixing. Do not use mortar after it has started to set.

B. Installation - General:
1. Build walls and other masonry construction to the full thickness shown. Build single wythe walls to the actual thickness of the masonry units, using units of nominal thickness shown.
2. Cut masonry units using motor-driven masonry saws to provide clean, sharp edges. Cut units to fit adjoining work neatly. Provide 100% solid units where cores would be exposed.
3. Cold weather construction, hot weather construction, and masonry construction tolerances: Comply with unit masonry standard ACI 530.1/ASCE 6/TMS 602 requirements.

C. Laying Masonry
1. Layout walls in advance to ensure accurate spacing of surface bond patterns, with uniform joint widths, and to properly locate openings, movement type joints, returns and offsets. Do not use less than half-size units at corners, jambs and other locations.
2. Lay up walls plumb and true to comply with ACI 530.1 tolerances. Provide square corners and angles, except as otherwise indicated, with courses level, accurately spaced and coordinated with other work.
3. Pattern bond: Running bond. Do not use units with less than 4" of horizontal face dimensions at corners or jambs.
4. Lay hollow CMU/ACMU with full mortar coverage on horizontal and vertical face shells. Bed CMU webs in mortar in starting courses. Maintain uniform 3/8" joint widths.
5. Lay face brick and solid CMU/ACMU with completely filled bed and head joints. Do not slush head joints. Maintain uniform 3/8" joint widths.
6. Compress and cut joints flush for masonry walls below grade or covered by other materials.
7. Tool joints in all exposed masonry work to a concave joint.
8. Provide interlocking masonry bond in each course at corners and intersecting walls.
9. As the work progresses, build in masonry accessories and related items. Fill in solidly with masonry around built-in items.
a. Bed hollow metal frame anchors in mortar and fill space between hollow metal frames and masonry solid with fine mortar grout.
b. Provide solid masonry bearing for all lintels, beams, joists, plates and load-bearing members.
c. Take particular care to embed all conduits and pipes within concrete masonry without fracturing exposed shells and to fit units around switch, receptacle and other boxes set in walls. Where electric conduit, outlets, switch boxes and similar items occur, grind and cut units before building in services.
d. Install anchors, plates and related work built into masonry work.
e. Install reinforcing steel and concrete fill where indicated. Comply with drawing details.
10. Horizontal joint reinforcing: Provide continuous joint reinforcing at all concrete masonry walls as follows:
a. In every second block course, 16" on center vertically, full height of wall and every block course where shown on the drawings.
b. Lap reinforcement a full width at the corners and at intersections or use special fabricated sections.
c. Fully embed side rods in mortar.
11. Anchoring masonry work: Provide anchoring devices of the type indicated or required.
12. Provide vertical expansion, control and isolation joints in masonry where indicated.
a. When not indicated, at maximum 30'-0" on center.
b. Locate control joints at points of natural weakness in masonry and acceptable to Architect.
c. Joint sealant color shall match masonry materials sealed.
13. Lintels: Install loose steel lintels furnished under structural steel work where shown. Set lintels in full bed of mortar.
14. Flashing and weeps:
a. Install concealed through wall masonry flashing at all wall sills, masonry openings in exterior walls with masonry above head, over all horizontal steel members built into masonry and elsewhere as indicated. Provide "drainage wall system" masonry construction.
b. Provide end dams and positive slope to drain. Extend flashing vertically at least 8" and built into or anchor to back-up with a termination bar for a complete watertight installation.
c. Flexible Membrane Flashing:
1.) Install membrane flashing in accordance with manufacturer's installation instructions.
2.) Fully adhere flashing to substrate.
3.) Lap flashing joints a minimum of 6", seal and roll with a hand roller.
4.) Trim bottom edge 1/4" back from exposed face of masonry.
5.) Seal edges, seams, cuts and penetrations with manufacturer's recommended mastic.
15. Install weeps in head joints of final course of exterior masonry wythe above flashing. Space weeps maximum of 24" on center horizontally and located to avoid door openings. Install weeps at head joints with outside face of weep material held 1/8" from the finish face of masonry unit.
16. Install compressible joint material at lintels and horizontal steel members. Build in joint fillers and seal with elastomeric joint sealant.

D. Masonry Veneer Walls:
1. Metal framed walls: Tie exterior masonry veneer wythe to back-up wall with individual metal ties screwed to metal stud framing.
2. Space ties 16" on center vertically and horizontally.
3. Maintain veneer wall cavity free of mortar droppings during masonry installation.

E. Parging:
1. Dampen masonry walls prior to parging.
2. Scarify each parging coat to ensure full bond to subsequent coat.
3. Parge masonry walls in two uniform coats of mortar to a total thickness of 3/4 inch (19mm).
4. Steel trowel surface smooth abs flat with a maximum surface variation of 1/8 inch per foot (1mm/meter).

F. Architectural Concrete Masonry Units: Install ACMU in accordance with the manufacturer's installation instructions and the following:
1. Draw ACMU from more than one pallet at a time during installation.

G. Reinforced Concrete Masonry
1. Reinforce and fill CMU/ACMU wall and column masonry where indicated. Fill all cores solid with concrete fill. Comply with NCMA TEK Bulletins 3-2, 3-3A and 14-2 recommendations.
a. Comply with drawing details for reinforcing steel size and spacing.
2. Install bond beams where indicated. Reinforce and fill units solid with concrete fill. Comply with drawing details for reinforcing steel size and spacing.

H. Repair, Pointing and Cleaning
1. In process cleaning: Wipe off excess mortar as the work progresses. Dry brush with bristle brushes exposed masonry at the end of each day's work. Remove mortar spatters and joint ridges.
2. Clean all exposed masonry. Cleaning agents subject to Architect's approval. Before applying any cleaning agent to the entire wall, clean a sample wall area of approximately 20 square feet in a location acceptable to the Architect. Do not proceed with final cleaning until the sample area has been allowed to dry a minimum of 3 days and the test area cleaning approved. Protect all windows, doors, louvers, metal lintels and other corrodible parts. Damaged materials and work replaced at Contractor's expense.
3. Dry clean exposed surfaces to remove large particles of mortar using hardwood wood paddles and scrapers. Metal tools not acceptable.
4. Presoak exposed masonry surfaces by saturating with water and flush off loose mortar and dirt.
5. Apply cleaning solutions and clean masonry in accordance with the cleaning material manufacturer's cleaning instructions.
6. Muriatic acid cleaning of masonry not permitted.

I. Architectural Concrete Masonry:
1. Keep ACMU walls clean during installation. Remove excess mortar on daily basis using brushes, rags or burlap squares.
2. Clean completed walls with detergent masonry cleaner recommended by the ACMU manufacturer. Acid cleaning agents, abrasive cleaners, tools or powders and metal cleaning tools and brushes are not permitted.
3. After final clean down and when walls are dry, apply ACMU acrylic finish coating in accordance with ACMU manufacturer's application instructions.

DIVISION 5 - METALS

SECTION 05120 - STRUCTURAL STEEL

1.1 General: Provide structural steel in accordance with the General Structural Notes and structural drawings and details.

A. Standards: Materials and construction shall conform to following:
1. AISC "Specification for the Design, Fabrication, and Erection of Structural Steel for Buildings."
2. AISC "Code of Standard Practice."
3. AWS "Structural Welding Code, D1.1-Steel."

2.1 Materials:

A. Materials compliance: When requested, submit acceptable data documenting materials compliance for each type of material required.

B. Structural Shapes: ASTM A36/A36M, 36 ksi steel.

C. Tubular Steel: ASTM A500, 46 ksi yield strength steel, cold-formed welded and seamless.

D. Structural pipe: ASTM A53, type and grade selected by the fabricator as required for design loading, standard finish, standard weight (Schedule 40) except as otherwise indicated.

E. Grout: ASTM C1107, pre-mixed, shrinkage resistant, non-metallic, non-corrosive, non-staining grout.

F. Shop paint primer: Refer to Section 09900 - Paints and Coatings.

G. Fabrication: Fabricate structural steel in accordance with AISC "Specification - Structural Steel for Buildings" and "Code of Standard Practice." Provide welded or bolted connections in accordance with the Structural Drawings connection requirements.
1. Welding: Conform to AWS welding standards. Provide only continuous welds, spot welding is not acceptable. Grind all exposed welds smooth.
2. Splicing: Material, if spliced, shall have maximum one splice per structural member. Perform splicing by full penetration butt-welding using AWS qualified welders and welding methods.
3. Shop painting: Shop paint structural metal members, except members or portions of members to be embedded in concrete or masonry, surfaces and edges to be field welded and galvanized surfaces. Refer to Section 09900 - Paints and Coatings.

3.1 Installation:

A. Erection: Erect structural steel in accordance with AISC "Specification - Structural Steel for Buildings" and "Code of Standard Practice".
1. Plumb, level and align base plates for structural members with steel shims.
2. Grout structural steel base plates solid that bear on concrete or masonry surfaces.

B. Testing: When required, comply with drawings testing requirements.

SECTION 05400 - COLD-FORMED METAL FRAMING

1.1 General: Provide cold-formed metal framing in accordance with the General Structural Notes and structural drawings and details.

A. Standards: Materials and construction shall conform to following:
1. AISI SG02.2-01 "Design of Cold-Formed Steel Structural Members."
2. AWS "Structural Welding Codes, D1.3-Sheet Steel."

2.1 Materials:

A. Materials compliance: When requested, submit acceptable data documenting materials compliance for each type of material required.

B. Load-Bearing Cold-Formed Metal Framing: ASTM A1003, Gage, Grade and Type indicated.
1. Components: Provide sizes and shapes indicated.
2. Finish: Galvanized complying with ASTM A653, minimum G60 coating.

C. Fabrication:
1. Cold-formed metal framing may be prefabricated into panels before erection. Fabricate panels plumb, square, true to line and braced against racking with joints welded.
a. Provide one-piece full-length cold-formed metal framing members. Splicing not permitted.
2. Attach and join other components by welding or screw fasteners, as indicated. Wire tying of framing components is not permitted.
3. Cut framing to fit squarely for attachment to perpendicular members or as required for angular fit against abutting members. Hold members securely in position until properly fastened.
4. Saw cut field cut framing. Torch cutting not acceptable.

3.1. Installation:

A. Erection: Erect cold-formed metal framing members of gage and at spacing indicated on the Structural Drawings. Align and secure studs to top and bottom runner tracks by welding or screw fasteners at both inside and outside flanges.

B. Tolerance Acceptance: Install cold-formed metal framing member as indicated on the plans. Install to 1/16" tolerance.

SECTION 05500 - METAL FABRICATIONS

NOT USED

1.1 General: Provide metal fabrications as shown and specified.

A. Submit shop drawings for the following:
1. Patio Rail systems.
a. Show thickness, size, construction and manner of assembling various members, joint locations and railing layout.
b. Show true profiles, connections and relationship to adjoining work and methods of anchoring.

2.1 Materials

A. Materials compliance: When requested, submit acceptable data documenting materials compliance.

B. Steel Shapes: ASTM A36/A36M, 36 ksi steel.

C. Stainless Steel:
1. Wall: 18 gage, ASTM A167, AISI Type 304 stainless steel, No. 4 finish.

D. Diamond Plate: Nominal 1/8" thick ASTM B209, Alloy 6061-T6, Aluminum Diamond Tread Plate.
1. Wall: Bright reflective finish.
2. Floor: Mil finish.

E. Patio Railing System
1. Submit shop drawings including the following:
a. Show thickness, size, construction and welding, as well as assembly drawings.
b. Show true profiles, connections of all typical joint configurations
c. Show installation (fastening) and proposed grout (non-gypsum base)
d. Show gate detail and gate hardware manufacturer and model number
e. Patio railing plan, with dimensions and panel assembly locations.
2. Fabrication
a. Patio rails and gate shall be fabricated from steel flat bar, 3/8" x 2 1/2", grade A36.
b. Corner connector angles shall be 2 1/2" x 2 1/2" x 1/4" steel L angle.
c. Gate hinges shall be a self-closing, adjustable tension type. Hinge installation shall be drilled and tapped. Permanently welded are unacceptable.
d. Gate stop shall have a rubber cushion stop and be affixed to the active gate.
e. All corners and joints shall be seal welded and outside joints ground smooth.
f. All welding spatter shall be removed before sand blasting.
3. Finish
a. Patio railing shall be painted PPG Durethane, color 518-6 Knight's Armor. Refer to Section 09900 - Paints and Coatings for preparation.

F. Exposed Fasteners:
1. Diamond Plate: #8 x 1" bevel headed stainless steel screw.
2. Patio Railing:
a. All fasteners shall be stainless steel.
b. Spacer washers separating railing sections shall be 1 1/2" diameter and 1/2" thick they shall be one piece thick washers and not comprised of stacking washers
c. Spacer washers shall be used on all straight sections and when railing panels join at 90 degree corner angles.

G. Shop paint primer: Refer to Section 09900 - Paints and Coatings

Consultant:

R/A
Red Architecture
589 W. NATIONWIDE BLVD. SUITE B
COLUMBUS, OHIO 43215 (614) 487-8770

BID DOCUMENTS ONLY NOT FOR CONSTRUCTION

COPYRIGHT 2026
ALL DRAWINGS AND SPECIFICATIONS SHALL REMAIN THE PROPERTY OF RED ARCHITECTURE LLC AND MAY NOT BE USED, DUPLICATED, OR ALTERED WITHOUT WRITTEN CONSENT OF THE ARCHITECT.

ECP PARTNERS

CMG HIGHLAND CITY SHELL, FL
TBD US 98
LAKELAND, FL 33812

Issue Record:

02/25/26	PERMIT SET
02/25/26	BID SET

Revisions:

Drawn: JLH,PH
Checked: DM,DF

Project No. EPL002

Contents:

ARCHITECTURAL SPECIFICATIONS

G011

3.1 Installation: Comply with the Architectural Drawing details and the following:

A. Exposed Fasteners:
1. Flat Metal Panels: Provide 18" vertical and horizontal pattern or spaced equally if 18" pattern does not finish evenly. Exposed fasteners shall remain unpainted in natural factory supplied finish.
2. Diamond Plate: Provide counter sunk fasteners at perimeter of panels at 2'-0" on center maximum as well as fully adhering to surface.

B. Stainless Steel:
1. Wall:
a. Clean stainless steel panel with mineral spirits.
b. Install stainless steel panels with Henry 117 oil based adhesive applied to wall with 1/8" notch tooth trowel.
c. Trim seams as indicated on the Drawings. No exposed fasteners.

C. Diamond Plate:
1. Wall: Mount over plywood substrate w/ flush exposed fasteners.
2. Floor: Provide continuous bead of silicone sealant to back side perimeter of plate prior to installation.
3. Mount with exposed fasteners. Provide continuous bead of silicone sealant to perimeter of plate after installation.

D. Patio Railing System:
1. Railing posts shall be set 6" deep into a core drilled hole, 4"-6" diameter
2. Railing posts shall be grouted in using non gypsum quick set grout.
3. Railing posts shall be set in grout plumb and level, with a tolerance of 1/8" in 4 feet.

E. Hand-inspect all joints and edges of installed metal materials. Unless otherwise indicated, fit exposed connections accurately together to form tight hairline joints. Grind and ease exposed joints, and edges smooth and free of burrs.

DIVISION 6 - WOOD AND PLASTICS

SECTION 06100 - ROUGH CARPENTRY

1.1 General: Provide rough carpentry work as shown and specified.

A. Standards: Materials and construction shall conform to following:
1. NIST PS-1-95 "Construction and Industrial Plywood."
2. NIST PS-2-95 "Performance Standards for Wood-Based Structural-Use Panels."
3. NIST PS-20-99 "American Softwood Lumber Standard."
4. NF&PA NDS-97 "Wood Construction and Supplement."
5. AWPA "Wood Treatment Standards."

2.1 Materials:

A. Lumber: Factory grade-marked, dressed, seasoned dimension lumber, S4S, air-dried, maximum 19% moisture content complying with PS-20, dimensions indicated.
1. Blocking, nailers and similar members: Standard Grade Western Dimension Lumber or Southern Pine species.
a. Provide preservative treated lumber, where indicated.

B. Plywood: Factory grade-marked, complying with PS-1, square edge, 5/8" thick.
1. APA-RATED SHEATHING EXP1.
a. Provide Exterior Grade (EXT) plywood, where indicated.
b. Provide fire-retardant treated plywood, where required by Building Code.

C. Oriented Strand Board (OSB): Factory grade-marked, complying with PS-2, square edge, 5/8" thick

2.2 Wood Treatment:

A. Preservative Treatment: Comply with applicable requirements of AWPA Standards C2 (Lumber).
1. Pressure preservative treat lumber with water-borne preservatives, acceptable to authorities having jurisdiction, to a minimum retention of 0.25 pcf.
2. Treat wood blocking, nailers and similar members in connection with roofing and flashing.
3. Treat wood plates, blocking, furring and similar concealed members in contact with masonry or concrete.

B. Fire-Retardant Treatment: Comply with applicable requirements of AWPA Standards C27 (Plywood). Identify "fire-retardant-treated plywood" with appropriate UL classification marking.
1. Treated materials shall meet "Interior Type A" FR-S ratings of not more than 25 for flame spread, smoke developed and fuel contributed when tested in accordance with UL 723 or ASTM E84, with no increase in flame spread and evidence of significant progressive combustion upon continuation of test for additional 30 minutes.

C. Kiln-dry all treated lumber and plywood materials after treatment to maximum 15% moisture content.

3.1 Installation:

A. Lumber: Provide wood blocking, nailers and similar members where shown and where required for attachment of other work and surface applied items. Attach to substrate as required to support applied loading.
1. Use only sound, seasoned materials of longest practical lengths and sizes to minimize joints.
2. Use materials free of warp. Make tight connections between members.

SECTION 06210 - FINISH CARPENTRY AND MILLWORK NOT USED

1.1 General: Provide finish carpentry and millwork as shown and specified.

A. Standards: Materials and construction shall conform to the following:
1. AWI "Architectural Woodwork Quality Standards - 1999."

B. Doors and door hardware: Install all door hardware furnished under Division 8 specification Sections.

C. Submit shop drawings for designated millwork.
1. Include complete details, materials lists and drawings showing fabrication of typical units, unit assemblies, locations and installation details.
2. List proposed cabinet hardware to suit indicated unit use or function.
3. Identify materials required to complete work ready for installation.
4. Obtain shop drawing approval before starting fabrication.

2.1 Materials:

A. Plywood: AWI Section 200
1. Concealed use substrates: CDX, D-3 Paint Grade hardwood plywood, with aspen veneer core, 5/8" thick. (OSB is an alternative as allowed by Chipotle CM)
2. Exposed to view finishes:
Random plank matched or slip and swing matched spalted maple veneer on 3/4" baltic birch core, with mill option sound grade hardwood backer. Spalted maple grain to run horizontally .5 sheen matte clear waterborne finish. Panels to be provided at 47" height, with widths varying from 24" to 95".

B. Millwork: Materials and construction as detailed on the Drawings.

C. Fabrication:
1. Millwork design and fabrication details shown on the drawings indicate design intent. Unless otherwise indicated, provide manufacturer's standard fabrication methods. Indicate all proposed variations from the drawing design and fabrication details on shop drawings.
2. Fabricate millwork in accordance with AWI "Custom Grade" requirements. Where details are not shown, comply with applicable Quality Standards or with alternate details acceptable to Architect as fabricator's option.
3. Fabricate finished work properly framed, closely fit and accurately set to required lines and levels and rigidly secured in place.
4. Fabricate work straight, plumb, level and in true alignment; neatly and accurately fit, scribed and thoroughly secured. Plane and sand miters and other joints. Ease all square edges. Provide millwork clean and free from warp, twist, open joints and other defects.
5. Provide finished woodwork dressed and sanded free from machine and tool marks, abrasions, raised grain or other defects on surfaces exposed to view in finished work.

D. Finish:
Sayerlack Hydroplus Waterborne Clear, 5 sheen for spalted veneer

3.1 Installation

A. Install finish carpentry and millwork products plumb, level, true and straight with no distortion. Shim as required using concealed shims. Install to a tolerance of 1/8" in 8'-0" for plumb and level (including countertops) and with 1/16" maximum offset in flush adjoining surfaces, 1/8" maximum offsets in revealed adjoining surfaces.
1. Scribe and cut finish carpentry and millwork products to fit adjoining work.
2. Anchor finish carpentry and millwork items to built-in place blocking, furnished under Section 06100, or directly attach to substrate framing. Secure to grounds, blocking and nailers with countersunk, concealed fasteners and blind nailing as required for a complete installation.
3. For installation of prefinished millwork wall panels, use finish nails for exposed nailing, installed with pneumatic nailer as per the following guidelines:
a. Nailer to be set for countersunk head approximately 1/8" on the face.
b. Use 16 ga straight finish nails in 2" length
c. Provide "dab" of construction adhesive on backside of panels at regular intervals.
d. Random placement preferred, do NOT group nails together.
e. No nails closer than 2" from any edge.
f. All nails to be no greater than 16-18" apart in any direction.
4. Touch-up shop finished materials marred or damaged during delivery, storage and installation with custom blended polyurethane to equal Minwax "Wipe on Poly".

B. Install casework without distortion so that doors and drawers will fit openings properly and be accurately aligned. Adjust hardware to center doors and drawers in openings and to provide unencumbered operation.

C. Install plastic laminate countertops, shelving and trim. Provide work level, true to alignment, accurately fit to wall conditions and securely fastened to base units and other support systems as indicated.

SECTION 06505 - FIBERGLASS REINFORCED PLASTIC PANELS NOT USED

1.1 General: Provide fiberglass reinforced plastic panels as shown and specified.

2.1 Materials:

A. Manufacturer: Marlite, (330) 343-6621, internet www.marlite.com, Email: info@marlite.com

B. Panel System: 'P6' Per Finish Schedule, Series: Standard FRP - "Marlite Class 1/A" Fiberglass Reinforced Polyester (FRP) Panels, 3/32" thick, 48" wide x full height required. Color: P100 White, Class A, pebbled matte surface texture. USDA approved for incidental food contact.
1. Panel trim: Extruded PVC, color matching panel color. Provide 1/2" x 1/2" inside corners, edge trim, and division moldings as required to complete the installation.
a. Inside Corner - M350
b. Outside Corner - M360
c. Division - M365
d. Edge - M370
2. Panel trim: Stainless Steel, color matching panel color. Provide 1-1/2" x 1-1/2" outside corners as required to complete the installation.
3. Sealant: Marlite "Silicone Sealant", white gunnable silicone sealant.
4. Panel adhesive: Marlite "C-551" water-based construction adhesive for panel application over porous surfaces.

C. Panel System: 'P2' Per Finish Schedule, Series: Standard FRP - "Marlite Class 1/A" Fiberglass Reinforced Polyester (FRP) Panels, 3/32" thick, 48" wide x full height required. Color: S100G White, smooth matte surface texture. USDA approved for incidental food contact.
1. Panel trim: Extruded PVC, color matching panel color. Provide division moldings as required to complete the installation.
a. Edge - M370
2. Sealant: Marlite "Silicone Sealant", white gunnable silicone sealant.
3. Panel adhesive: Marlite "C-551" water-based construction adhesive for panel application over porous surfaces.

D. Alternate panel spec: Color: S100 S/2/S White, smooth matte surface texture

3.1 Installation

A. Install the FRP system products using panel adhesive in accordance with the manufacturer's instructions and layout as shown in drawings.
1. Install panels plumb, level, true and straight with no distortion; providing a continuous bead of silicone sealant in each joint and trim groove and between trim and adjacent construction.
2. Provide corner trim, closure trim at intersections of dissimilar materials and moldings at abutting panels.

SECTION 07210 - BUILDING INSULATION

1.1 General: Provide building insulation as shown and specified.

2.1 Materials:

A. Extruded polystyrene foam rigid board insulation: Dow Chemical Co., 866-583-2583, internet www.dowbuildingmaterials.com
1. Type: Dow "Styrofoam" Type IV, 1.6 pcf minimum density, 25 psi compressive strength complying with ASTM C 578, R-value equal 5 per inch of thickness. Provide lengths and widths as required to coordinate with space insulated.
2. Perimeter foundation walls: Styrofoam SE, R-value indicated.

B. Glass fiber batt/blanket insulation: Owens Corning Corp., (800) 438-7465, internet www.owenscorning.com.
1. Type: Owens Corning " Thermal Batt" Type I unfaced glass fibers and binders formed into flexible blankets or batts complying with ASTM C665,. Provide lengths and widths required to coordinate with spaces insulated.
2. Exterior walls: Unfaced, R-value/thickness indicated

C. Vapor barrier membrane: Polyethylene, minimum 6 mils thick, complying with ASTM D 4397, maximum permeance rating of 0.13 perm.
1. Joint tape: Pressure sensitive tape designed for sealing joints and penetrations of above and below grade vapor barrier sheets.
2. Mounting tape: Double-faced pressure sensitive tape suitable for mounting vapor barriers to steel framing.

3.1 Installation:

A. General:
1. Install insulation in accordance with manufacturer's recommendations for conditions of installation indicated. Install insulation in single layer of required thickness over entire area to be insulated. Cut and fit tightly around obstructions. Fill all voids.
2. Install exterior wall insulation continuous behind electrical boxes, conduit, piping and ductwork.

B. Foundation perimeter walls and slabs:
1. Install rigid foam insulation vertically from top of slab to frost line or horizontally under slabs, extending a minimum 36" in from exterior walls.
2. Protect insulation from displacement and damage during backfilling and slab placement

C. Exterior Walls:
1. Install batt/blanket insulation full height at exterior wall framing. Use blanket widths and lengths that fill cavities formed by framing members and provide a friction fit between edges of insulation and metal framing members.
2. Provide galvanized wire mesh or metal strapping to provide supplementary support when required to maintain insulation in permanent proper location.

D. Vapor Barriers:
1. Install a single layer of vapor barrier membrane over the interior of exterior metal wall framing after installation of insulation. Secure with double faced tape at wall framing.
2. Provide single unspliced material height. Horizontal joints not acceptable. Minimize vertical joints. Lap vertical joints and secure in place with joints taped. Provide tape sealed contact with door frames, window frames, piping, conduit, ductwork, registers and the vapor barrier.
3. Seal all cuts and penetrations of vapor barrier membrane with tape before installing surface finishes.

SECTION 07240 - EXTERIOR INSULATION AND FINISH SYSTEM (PB) NOT USED

1.1 General: Provide the exterior insulation and finish system (EIFS) as shown and specified.

A. Standards: Materials and construction shall conform to the following:
1. EIMA (EIFS Industry Members Association) Standards and Publications.
a. 101.01, 101.02, 101.03, 101.86, 105.01, 200.02.
b. EIMA "Guideline Specification for Expanded Polystyrene (EPS) Insulation board."

B. Quality Assurance:
1. System components:
a. Produced by a single manufacturer or by manufacturers approved by the EIFS system manufacturer.
b. Fire performance: Flame spread of 25 or less, smoke developed of 450 or less when tested in accordance with ASTM E84.
2. Installer Qualifications: Performed by the system manufacturer or an applicator trained and approved by the system manufacturer. During application, the work shall be inspected by system manufacturer's representative.

C. Environmental conditions: Comply with manufacturer's requirements. Do not install materials during wet or freezing weather.

2.1 Materials

A. Manufacturer: STO Corp., P: (800) 221-2397, internet www.stocorp.com
Strategic Accounts Manager: Ray Redmond, P: (616) 437-2230, rredmond@stocorp.com

B. Exterior insulation and finish system: Sto Class PB "StoTherm ci" EIFS.
1. Air/Moisture barrier: Sto Guard system.
a. Sto RapidGuard for rough opening protection, sheathing joints and inside and outside corners.
b. Sto Guard Mesh: Coated glass fiber fabric reinforcing mesh.
c. Sto Gold Coat: Waterproof Fluid Applied Air/Moisture Barrier
2. Primer/adhesive and base coat: Sto Primer/Adhesive-B, one-component, polymer modified, cement -based factory blended primer/adhesive used to attach insulation board to prepared sheathing substrates and as a base coat in Essence claddings.
3. Insulation board: ASTM C578 Type 1, nominal 1.0 lb/ft^3 expanded polystyrene meeting EIMA Guideline specifications for EPS insulation board.
4. Finish coating: Sto Essence DPR, ready-mixed 100% acrylic-based, textured wall coating.
a. Medium/Fine Sand Finish.
b. Color as indicated on the Architectural drawings from manufacturer's full color range or match custom color.
5. System warranty: 10 year labor and material.

C. Portland cement: ASTM C150, Type I or II, white or gray in color.

D. Water: Clean, potable and free of foreign matter.

E. Reinforcing mesh: Sto open-weave glass fiber fabric with alkaline resistant coating.
1. Standard mesh: Sto Mesh, nominal 4.5 oz/yd^2 fabric.
2. Ultra-High impact mesh: Sto Armor Mat, nominal 15 oz/yd^2 ultra-high impact fabric.
3. Specialty mesh:
a. Sto Detail Mesh, nominal 4.2 oz/yd^2 flexible, symmetrical, interlaced glass fiber fabric.
b. Sto Corner Mat, nominal 7.8 oz/yd^2 pre-creased, heavy-duty, glass fiber fabric.

F. Joint sealants: StoSeal STPE Sealant complying with ASTM C920 and Section 07900 requirements.
1. Adhesion: Evaluated in accordance with ASTM C1382.
2. Color: Matching EIFS finish coating color, and visually acceptable to the Architect.

G. Accessories: Provide plastic stops and trim where indicated. Materials shall be compatible with EIFS materials and acceptable to EIFS manufacturer.
1. Starter Track: Rigid PVC plastic track with weepholes and drip edge.

3.1 Mixing

A. Mix materials in accordance with manufacturer's published instructions.
1. Mix with a clean, rust-free high speed mixer to a uniform consistency.
2. No rapid binder, anti-freeze or accelerator additives permitted.

4.1 Installation

A. Preparation:
1. Coordinate installation of roofing membrane, windows, doors and other wall penetrations to provide a continuous exterior wall air/moisture barrier.
2. Coordinate installation of windows, doors and window and door flashing to provide continuous exterior wall air/moisture barrier.
3. Install copings and joint sealants immediately after installation of the EIFS, when EIFS coatings are dry.

B. Installation: Install Sto Guard air/moisture barrier system and exterior insulation and finish system (EIFS) in strict accordance with manufacturer's installation instructions, complying with governing regulations and industry standards applicable to the work.
1. Back wrap exposed board edges with mesh.
2. Provide double wrap or corner mat reinforcing at all inside and outside corners.
3. Provide expansion joints in accordance with manufacturer's recommendations for type of substrates and systems required, and visually acceptable to the Architect.
4. Provide drainable starter track horizontal edge trim as base of wall, above windows and doors openings and beneath windows with concealed flashing.

C. Insulation and adhesive application:
1. Install insulation board with long edge horizontal using running bond pattern. Off set insulation joints with substrate joints. Stagger joints and interlock joints at corners.
2. Apply adhesive to insulation board with a stainless steel trowel notched trowel, providing vertical uniform ribbons of adhesive when board is installed. Mount insulation board on substrate. Level, align and tamp insulation in place. Provide uniform contact and bond with joints tightly butted. Rasp edges and high areas as required to produce a level, plane surface.

D. Base coat and reinforcing mesh application:
1. Apply detail mesh at corners of windows, doors, and all penetrations through the EIFS.
2. Standard mesh: Apply base coat over insulation board to a uniform 1/8 inch thickness, including high impact mesh where indicated. Embed standard reinforcing mesh into wet adhesive, lap edges at seams. Smooth surface until mesh is not visible. Allow to base coat to dry.
3. Ultra-High impact mesh: Apply base coat over insulation board to a uniform 1/8 inch thickness. Fully embed ultra-high impact reinforcing mesh into wet adhesive, butt edges at seams. Smooth surface until mesh is not visible. Allow to base coat to dry. Locate at 4'-0" wide perimeter of the rear service door to 6'-0" above grade and as indicated on Architectural drawings.

E. Apply finish coating continuously in one operation to the entire wall surface Provide a uniform finished appearance. Level and texture to the specified finish texture.

F. Install joint sealants at perimeter joints and joints within the system using elastomeric joint sealants, in accordance with drawing details and sealant manufacturer's recommendations.

SECTION 07250 - WEATHER BARRIERS

1.1 Section Includes

A. Weather barrier membrane
B. Seam Tape
C. Flashing
D. Fasteners

1.2 References

A. ASTM International
1. ASTM C920; Standard Specification for Elastomeric Joint Sealants
2. ASTM C1193; Standard Guide for Use of Joint Sealants
3. ASTM D882; Test Method for Tensile Properties of Thin Plastic Sheeting
4. ASTM D1117; Standard Guide for Evaluating Non-woven Fabrics
5. ASTM E84; Test Method for Surface Burning Characteristics of Building Materials
6. ASTM E96; Test Method for Water Vapor Transmission of Materials
7. ASTM E1677; Specification for Air Retarder Material or System for Framed Building Walls.
8. ASTM E2178; Test Method for Air Permeance of Building Materials

B. AATCC - American Association of Textile Chemists and Colorists
1. Test Method 127 Water Resistance: Hydrostatic Pressure Test

C. TAPPI
1. Test Method T-410; Grams or Paper and Paperboard (Weight per Unit Area)
2. Test Method T-460; Air Resistance (Gurley Hill Method)

1.3 Quality Assurance

A. Qualifications
1. Installer shall have experience with installation of commercial weather barrier assemblies under similar conditions.
2. Installation shall be in accordance with weather barrier manufacturer's installation guidelines and recommendations.
3. Source Limitations: Provide commercial weather barrier and accessory materials produced by single manufacturer.

1.4 Delivery, Storage and Handling

A. Refer to Section 01400 Quality Requirements.
B. Deliver weather barrier materials and components in manufacturer's original, unopened, undamaged containers with identification labels intact.
C. Store weather barrier materials as recommended by weather barrier manufacturer.

1.5 Scheduling

A. Review requirements for sequencing of installation of weather barrier assembly with installation of windows, doors, louvers and flashings to provide a weather-tight barrier assembly.
B. Schedule installation of weather barrier materials and exterior cladding within 9 months of weather barrier assembly installation.

2.1 Manufacturer

A. DuPont Building Innovations; 4417 Lancaster Pike, Chestnut Run Plaza 721, Wilmington, D19805;
1.800.44TYVEK (8-9835); http://constructiontyvek.com
Alternate: STO Corp., P: (800) 221-2397, internet www.stocorp.com

2.2 Materials

A. Basis of Design: Hi-performance, spunbonded polyolefin, non-woven, non perforated, weather barrier is based upon DuPont Tyvek CommercialWrap and related assembly components.
Alternate: StoGuard System, See Section 07240

B. Performance Characteristics:
1. Air Penetration: 0.001 CFM/feet squared at 75 Pa, when tested in accordance with ASTM E2178. Type I per ASTM E1677.
2. Water Vapor Transmission: 28 perms, when tested in accordance with ASTM E96 Method B.
3. Water Penetration Resistance: 280 cm when tested in accordance with AATCC Test Method 127.
4. Basis Weight: 2.7 oz/yard squared, when tested in accordance with TAPPI Test Method T-410.
5. Air Resistance: Air infiltration at >1500 seconds, when tested in accordance with TAPPI Test Method T-460.
6. Tensile Strength: 38/35 lbs/inch, when tested in accordance with ASTM D882, Method A.
7. Tear Resistance: 12/10 lbs., when tested in accordance with ASTM D1117.
8. Surface Burning Characteristics: Class A, when tested in accordance with ASTM E 84. Flame Spread: 10, Smoke Developed: 10.

2.3 Accessories

A. Seam Tape: 3 inch wide, DuPont Tyvek Tape for commercial applications.

B. Fasteners:
1. For steel frame construction - DuPont Tyvek Wrap Cap Screws, as manufactured by DuPont Building Innovations: 1-5/8" rust resistant screw with 2-inch diameter plastic cap or manufacturer approved 1-1/4" or 2" metal gasketed washer.
2. For wood frame construction - Tyvek Wrap Caps, as manufactured by DuPont Building Innovations: #4 nails with large 1-inch plastic cap fasteners.
3. For masonry construction - masonry tap-con fasteners with Tyvek Wrap Caps as manufactured by DuPont Building Innovations: 2 inch diameter plastic cap fasteners.

C. Adhesives:
1. Provide adhesive recommended by weather barrier manufacturer.
2. Products:
a. Liquid Nails LN-109
b. Polyglaze SM 5700
c. Denso Butyl Liquid
d. 3M High Strength 90
e. SIA 665
f. Adhesives recommended by the weather barrier manufacturer.

D. Primers:
1. Provide flashing manufacturer recommended primer to assist in adhesion between substrate and flashing.
2. Product:
a. 3M High Strength 90
b. Denso Butyl Spray
c. SIA 655
d. Permagrip 105
e. ITW TACC Sta' Put SPH
f. Primers recommended by the flashing manufacturer.

E. Flashing:
1. DuPont FlexWrap, as manufactured by DuPont Building Innovations: flexible membrane flashing materials for window openings and penetrations.
2. DuPont Straightflash, as manufactured by DuPont Building Innovations: straight flashing membrane materials for flashing windows and doors and sealing penetrations such as masonry ties, etc.
3. DuPont Straightflash VF, as manufactured by DuPont Building Innovations: dual-sided straight flashing membrane materials for brick mold and non-flanged windows and doors.

3.1 Examination
A. Verify substrate and surface conditions are in accordance with weather barrier manufacturer recommended tolerances prior to installation of weather barrier and accessories.

3.2 Installation - Weather Barrier
A. Install weather barrier per regional requirements in accordance with manufacturer recommendations.
B Install weather barrier prior to installation of windows and doors.
C. Start weather barrier installation at a building corner, leaving 6-12 inches of weather barrier extended beyond corner to overlap.
D. Install weather barrier in a horizontal manner starting at the lower portion of the wall surface with subsequent layers installed in a shingling manner to overlap lower layers. Maintain weather barrier plumb and level.
E. Sill Plate Interface: Extend lower edge of weather barrier over sill plate interface 3-6 inches. Secure to foundation with elastomeric sealant as recommended by weather barrier manufacturer.
F. Window and Door Openings: Extend weather barrier completely over openings.
G. Overlap weather barrier
1. Exterior corners: minimum 12 inches.
2. Seams: minimum 6 inches.
H. Weather barrier Attachment:
1. For steel or wood frame construction - Attach weather barrier to studs through exterior sheathing. Secure using weather barrier manufacturer recommended fasteners, space 12-18 inches vertically on center along stud line, and 24 inch on center, maximum horizontally.
2. For masonry construction - Attach weather barrier to masonry. Secure using weather barrier mfr recommended fasteners, spaced 12-18 inches vertically on center and 24 inches maximum horizontally. Weather barrier may be temporarily attached to masonry using recommended adhesive, placed in vertical strips spaced 24 inches o.c., when coordinated on the project site.
I. Apply 4 inch by 7 inch piece of DuPont StraightFlash to weather barrier membrane prior to the installation cladding anchors.

3.3 Seaming

A. Seal seams of weather barrier with seam tape at all vertical and horizontal overlapping seams.
B. Seal any tears or cuts as recommended by weather barrier manufacturer.

3.4 Opening Preparation (for use with non-flanged windows - all cladding types)

A. Flush cut weather barrier at edge of sheathing around full perimeter of opening.
B. Cut a head flap at 45-degree angle in the weather barrier at window head to expose 8 inches of sheathing. Temporarily secure weather barrier flap away from sheathing with tape.

3.5 Flashing (for use with non-flanged windows - all cladding types)

A. Cut 9-inch wide DuPont FlexWrap a min of 12 inches longer than width of sill rough opening. Apply primer as required by mfr.
B. Cover horizontal sill by aligning DuPont FlexWrap edge within side edge of sill. Adhere to rough opening across sill and up jambs a minimum of 6 inches. Secure flashing tightly into corners by working in along the sill before a adhering up the jambs.
C. Fan DuPont FlexWrap at bottom corners onto face of wall. Firmly press into place. Mechanically fasten fanned edges.
D. Apply 9-inch wide strips of DuPont StraightFlash at jambs. Align flashing with interior edge of jamb framing. Start DuPont StraightFlash at head of opening and lap sill flashing down to the sill. Spray-apply primer to top 6 inches of jambs and exposed sheathing.
E. Install DuPont FlexWrap at opening head using same installation procedures used at sill. Overlap jamb flashing min 2 inches.
F. Coordinate flashing with window installation.
G. On exterior, install backer-rod in joint between window frame and flashed rough framing. Apply sealant at jambs and head. leaving sill unsealed. Apply sealants in accordance with sealant manufacturer's instructions and ASTM C 1193.
H. Position weather barrier head flap across head flashing. Adhere using 4-inch wide DuPont StraightFlash over the 45-degree seams.
I. Tape top of window in accordance with manufacturer recommendations.
J. On interior, install backer rod in joint between frame of window and flashed rough framing. Apply sealant around entire window to create air seal. Apply sealant in accordance with sealant manufacturer's instructions and ASTM C 1193.

3.6 Protection
A. Protect installed weather barrier from damage.

Consultant:
R/A
Red Architecture
589 W. NATIONWIDE BLVD. SUITE B
COLUMBUS, OHIO 43215 (614) 487-8770

BID DOCUMENTS ONLY NOT FOR CONSTRUCTION

COPYRIGHT 2026
ALL DRAWINGS AND SPECIFICATIONS SHALL REMAIN THE PROPERTY OF RED ARCHITECTURE LLC AND MAY NOT BE USED, DUPLICATED, OR ALTERED WITHOUT WRITTEN CONSENT OF THE ARCHITECT.

ECP PARTNERS

CMG HIGHLAND CITY SHELL, FL
TBD US 98
LAKELAND, FL 33812

Issue Record:

02/25/26	PERMIT SET
02/25/26	BID SET

Revisions:

Drawn: JLH,PH
Checked: DM,DF

Project No. EPL002

Contents: ARCHITECTURAL SPECIFICATIONS

G012

NOT USED

SECTION 07312 - ROOFING SYSTEM REPAIR

1.1 General: When penetration of the existing roofing system is required to accommodate new construction, perform necessary roofing system repair.

A. Coordination: Before starting work, verify with the Tenant's Construction Manager and the Owner the following:
1. Existing roof system materials and installation methods.
2. Repair work responsibilities and warranty requirements. To maintain original warranty, where provided use original roof contractor.

B. Qualifications: Repair work shall be performed only by an experienced roofing installer approved or licensed by the existing roofing system materials manufacturer; with not less than five years of successful experience installing and repairing roofing systems similar to this projects existing roofing system.

2.1 Materials:

A. Provide and install only materials approved and recommended by the roofing manufacturer for repairing the existing roofing system.

3.1 Installation:

A. Preparation: Inspect roof surface conditions with roof manufacturer's representative to verify extent and location of any other repairs required to ensure a watertight roofing system upon completion of the repair work.

B. Make necessary repairs. Match existing roof slope, insulation materials and roofing membrane materials, except as otherwise approved by the existing roofing system manufacturer to accommodate new construction and repair work.

C. Install curb flashing furnished by mechanical and electrical trades for new roof top equipment.

SECTION 07420 - METAL WALL PANELS

1.1 General:

A. Standards:
1. Furnish all labor, material, tools, equipment and services for all preformed fascia and wall panels as indicated, in accord with provisions of Contract Documents.
2. Completely coordinate with work of all other trades.
3. Although such work is not specifically indicated, furnish and install all supplementary or miscellaneous items, appurtenances and devices incidental to or necessary for a sound, secure and complete installation.

B. Related work specified elsewhere:

1. Structural steel: Section 05100
2. Steel joists: Section 05200 or 05400
3. Flashing and sheet metal: Section 07600

1.2 Quality Assurance:

A. Applicable standards:
1. SMACNA: "Architectural Sheet Metal Manual" Sheet Metal and Air Conditioning Contractors National Association, Inc.
2. AISC:"Steel Construction Manual" American Institute of Steel Construction.
3. AISI: "Cold Form Steel Design Manual: American Iron and Steel Institute.
4. ASTM A792-83-AZ50: Specifications for steel sheet, aluminum-zinc alloy coated (galvanized) by the hot dip process, general requirements (Galvalume).

B. Manufacturer's qualifications:
1. Manufacturer has a minimum of three years experience in manufacturing metal wall systems of this nature. Panels specified in this section shall be produced in a factory environment (not job site roll formed) with fixed base roll forming equipment assuring the highest level of quality control. A letter from the manufacturer certifying compliance will accompany the product material submittals.

1.3 Product Delivery, Storage and Handling

A. Delivery: Deliver metal wall system to job site properly packaged to provide protection against transportation damage.
B. Handling: Exercise extreme care in unloading, storing and erecting metal wall system to prevent bending, warping, twisting and surface damage.
C. Storage: Store all materials and accessories above ground on well skidded platforms. Store under waterproof covering. Provide proper ventilation of metal wall system to prevent condensation build up between each panel or trim/ flashing component.

2.1 Materials

A. Metal wall system profile:
1. Ribbed Panel
a. HWP wall panel by PAC-CLAD or similar to be approved by Chipotle
2. Flush Panel, no reveal or ribs
B. Metal wall system style:
1. Concealed fasteners
C. Gauge: 24 gauge
D. Substrate: Per Plans
E. Finish: PVDF
G. Color: Black, to be approved by Chipotle.
H. Acceptable Manufacturer: PAC-CLAD or similar to be approved by Chipotle

3.1 Surface Conditions

A. Examination:
1. Inspect installed work of other trades and verify that such work is complete to a point where this work may continue.
2. Verify that installation may be made in accordance with approved shop drawings and manufacturer's instructions.

3.2 Installation

A. Install metal wall system system so that it is weathertight, without waves, warps, buckles, fastening stresses or distortion.
B. Install metal wall system in accordance with manufacturer's instructions and shop drawings.
C. Provide concealed anchors at all panel attachment locations.
D. Install panels plumb, level and straight with seams parallel, conforming to design as indicated.

3.3 Cleaning, Protection

A. Dispose of excess materials and remove debris from site.
B. Clean work in accordance with manufacturer's recommendations.
C. Protect work against damage until final acceptance. Replace or repair to the satisfaction of the architect and work that becomes damaged prior to final acceptance.
D. Touch up minor scratches and abrasions.

SECTION 07540 - THERMOPLASTIC MEMBRANE (PVC) ROOFING

1.1 General: Provide the thermoplastic membrane (PVC) roofing system as shown and specified.

A. Standards: Materials and construction shall conform to following:
1. ASTM D5036 "Application of Adhered Poly(Vinyl Chloride) Sheet Roofing."
2. FM 1-29 Loss Prevention Data Adhered or Mechanically Attached Single Ply Membrane Roof Systems."
3. NRCA "Single-Ply Roofing Membrane."
4. UL "790 - Tests for Fire Resistance of Roof Covering Materials."

B. Installer Qualifications: An experienced roofing installer approved by roofing system manufacturer and with not less than five years of successful experience installing membrane roofing systems similar to those required for this project.

C. Deliver, store and handle roof system materials in accordance with manufacturer's recommendations to avoid damage and deterioration.
1. Comply with manufacturer's recommendations for handling and protection during installation.

D. Install roofing work only when weather conditions are in compliance with manufacturer's specific environmental requirements and conditions will permit work to be performed in accordance with manufacturer's recommendations and warranty requirements.
1. Protect adjacent materials and surfaces from damage and soiling during roofing system installation.
2. Provide special protection on completed roofing work.
3. Protect paving and structure walls adjacent to hoists before starting work.
4. Do not overload the building structure with storage of materials or installation equipment on the substrate decking.

E. Warranty
1. Contractor and roof system installer shall jointly warrant roofing materials and installation for a period of two years from the date of Substantial Completion. Warranty shall include roofing membrane, flashing, roof insulation, roofing accessories and sheet metal work provided under Section 07600.
2. Manufacturer's warranty: Submit executed copy of roofing system manufacturer's 15 year total system warranty, including labor and materials for the entire roof system. Including perimeter edge metal, Section 07600 Flashing & Sheet Metal

2.1 Materials

A. Manufacturer: Duro-Last Roofing, Inc, (800)248-0280, Austin Russell, austin.russell@holcim.com, www.duro-last.com
1. Basis of Design Product Roofing System
a. Thermoplastic single ply membrane roofing system: DL Membrane (PVC) fully adhered, smooth surface, UL Class A fire-rated single ply membrane roofing system.
b. Thermoplastic fiber reinforced PVC membrane, not less than 40 mils (.040), complying with ASTM D4434 and membrane manufacturer's published physical properties.

B. Comparable Alternate Roof Manufacturers:
1. Versico Roofing Systems, (480) 528-6923, Jeff Kelly, jeff.kelly@versico.com
a. VersiFlex PVC Adhered System
2. Other comparable alternates can be considered when approved by Arch PM and Tenant DM/CM.

C. The roof covering design must resist a wind load of 100 mph, Exposure C and shall resist impact damage based on results of tests based on the results of tests conducted in accordance with ASTM D 3746, ASTM D 4272, CGSB 37-GP-52M or FM 4470
1. Insulation cover board: Georgia-Pacific Corp. (800) 284-5347, internet www.gp.com, "Dens-Deck" nonstructural fiberglass- faced, silicone-treated gypsum core panels, 1/2"" thickness.
2. Roof insulation: Rigid closed cell polyisocyanurate boards approved by the membrane manufacturer; complying with ASTM C1289, Type II, minimum 20 psi compressive strength, aged R-value equal 5.6 per inch of thickness.
a. Provide a double layer installation. Minimum total R-value as indicated on plans.
b. Specified perimeter edge metal shall be compliant with International Building Code ANSI / SPRI ES-1, ER2 testing requirements.
3. Flashing: Roof system manufacturer's standard sheet flashing of same material, type, and color as sheet membrane. Specified perimeter edge metal will be compliant with International Building Code ANSI / SPRI ES-1, RE2 testing requirements.
4. Membrane Bonding Adhesive: Roof system manufacturer's standard membrane bonding adhesive.
5. Insulation and Cover Board Adhesive: Dow Chemical Company, (888) 868-1183, internet www.flexibeproducts.com, "INSTA-STIK Professional Roof Insulation Adhesive", a single component, moisture cured polyurethane adhesive.
6. Fasteners: Roof system manufacturer's standard fasteners for project conditions indicated.
7. Accessories: Roof system manufacturer's recommended pourable sealers, preformed penetration flashing, preformed corner flashing, seam caulk, termination bars and other accessories required for substrate surfaces and installation conditions indicated.
8. Traffic walkways: Duro-Last Roof Track II walkway pads.3.1 Installation

3.1 Installation

A. Preparation:
1. Clean substrate surfaces of debris and other substances detrimental to roofing installation.
2. Correct unsatisfactory conditions before starting roofing. Roof deck surface conditions shall comply with manufacturer's requirements and be acceptable to the roofing system installer.

B. Installation:
1. General: Provide roofing system materials and installation complying with roofing system manufacturer's instructions and governing codes and regulations.
a. Mix and apply roof insulation and cover board adhesive in strict accordance with the adhesive manufacturer's installation instructions. Dispense adhesive at manufacturer's recommended application rate using approved dispensing equipment.
2. Roof insulation.
a. Extend insulation full thickness over entire surface to be insulated. Cut and fit around obstructions; fill all voids with insulation. Provide saddles and tapered edges as required to provide positive proper drainage.
b. Install and secure in place with insulation adhesive, a double layer of insulation units of the required thickness. Run long joints of insulation in continuous straight lines, perpendicular to roof slope, with end joints staggered between rows. Stagger joints of each layer of insulation. Butt edges to moderate contact. Limit joints between adjacent units to maximum 1/4".
3. Insulation cover board: Install and secure in place with insulation adhesive a single layer of insulation cover board on installed roof insulation. Secure cover board in accordance with membrane manufacturer's recommendations. Stagger joints with joints of roof insulation.
4. Thermoplastic membrane: Comply with membrane manufacturer's instructions and recommendations for handling and installing single ply membrane roofing.
a. Unroll and position roofing sheet membrane without stretching. Align top sheet with pr-marked lines on bottom sheet. Allow membrane to "relax" for at least 30 minutes before adhering, splicing and flashing.
b. Adhere membrane to insulation cover board with bonding adhesive. Broom bonded membrane to achieve maximum contact.
c. Join membrane seams using approved heat welding equipment. Check all splices for voids and repair voids with heat gun and roller.
d. When required, mechanically fasten membrane at roof perimeter, curb flashing and similar penetrations in accordance with manufacturer's installation instructions.

SECTION 07600 - FLASHING AND SHEET METAL

General:

A. Standards: Materials and construction shall conform to following:
1. SMACNA "Architectural sheet Metal Manual- 1993."
B. Installation: Performed under Section 07540 work.

1.1 Pre-manufactured perimeter edge metal and accessories

Manufacturer: Duro-Last Roofing / Exceptional Metals, Inc, (800) 248-0280, Jason Dark, www.Duro-Last.com

A. Duro-Last / Exceptional Metals Snap Coping made of 24-gauge galvalume, cover provided with Kynar architectural finish providing a 35 year finish warranty. Meets ANSI/SPRI ES-1 2003 method RE-2 testing requirements. (Color - Refer to Exterior Elevations)
B. Duro-Last / Exceptional Metals Vinyl backed scupper. Scupper profile & size indicated Fig 1-20.

1.2 General: Miscellaneous sheet metal

A. Standards: Materials and construction shall conform to following:
1. SMACNA "Architectural sheet Metal Manual- 1993."
B. Installation: Performed under Section 07540 work.

2.1 Materials:

A. Galvanized steel: ASTM A653 commercial quality sheet steel with 0.2% copper, G90 hot-dip galvanized. Gage indicated.
1. Scuppers: Minimum 16 gage.
2. Coping/Wall caps: Minimum 18 gage.
B. Aluminum sheet: ASTM B209 alloy 3003, temper as required for forming and performance. Thickness indicated.
1. Conductor Boxes: Minimum 0.040"thickness.
2. Downspouts: Minimum 0.025"thickness.
C. Joint sealers: One-component silicone elastomeric joint sealant complying with ASTM C920. Color matched to sheet metal finish.

D. Metal accessories: Provide sheet metal fasteners, clips, straps, anchoring devices and similar accessory units as required for installation of work, matching or compatible with material installed, non-corrosive, size and gage as required for performance and acceptable to the Architect.
E. Fabrication: Shop fabricate sheet metal work to comply with profiles and sizes indicated and to comply with standard industry standards as shown by SMACNA in the "Architectural Sheet Metal Manual."
1. Conductor boxes: SMACNA Chapter 1 - Roof Drainage Systems. Profile and size indicated Fig 1-25.
2. Scuppers: SMACNA Chapter 1 - Roof Drainage Systems. Profile and size indicated Fig 1-20.
3. Downspouts: SMACNA Chapter 1 - Roof Drainage Systems. Profile and size indicated. Installation Fig. 1-31 with strap hanger Fig. 1-35.
4. Formed coping/wall caps: SMACNA Chapter 3 - Copings. Design Fig 3-1. Profile and size indicated with Fig. 3-3 butt joints and concealed back-up plates. Install formed copings with continuous cleat fasteners similar to Fig 3-1 at exposed face and screw fasteners with washers space maximum 24" on center at roof side.

3.1 Installation:

A. Preparation: Coordinate sheet metal work with other work for the correct sequencing of items which make up the entire roof system of weatherproofing and rain drainage:
B. Installation: Comply with SMACNA "Architectural Sheet Metal Manual" recommendations, drawing details and approved shop drawings for installation of the work.
1. Anchor sheet metal items securely in place by methods indicated, providing for thermal expansion. Conceal fasteners and expansion provisions whenever possible. Install joint sealants where required.
2. Set units true to lines and levels indicated. Install work with sealed laps, joints and seams that will be permanently watertight and weatherproof. Bed flanges of sheet metal work in thick coat of roofing cement or sealant compatible with roofing membrane.
3. Separate sheet metal work from dissimilar metals and treated wood materials. Provide rosin-sized paper slipsheet over treated wood.
4. Fabricate, support and anchor conductor boxes and downspouts to withstand thermal expansion, stresses and full loading by ice or water without damage, deterioration or leakage.

Section 07900 – JOINT SEALERS

1.1 General: Provide joint sealers as shown and specified.

A. Standards:Comply with ASTM C 920 requirements.

B. Application: Performed by skilled, experienced joint sealer applicators.

2.1 Materials:

A. Poly urethane sealants:
1. Tremco Commercial Sealants (800) 321-7906, internet www.tremcosealants.com,
a. "Dymonic FC" One component, fast skinning, Low Modulus Polyurethane.
b. "Dymeric 240 FC" Multi Component, gun grade, chemically curing, tintable fast setting polyurethane sealant.
2. Sonneborn, (724) 756-9582, internet www.sonneborn.com
a. Color pack for polyurethane multi component, gun grade chemically curing sealant.

B. Silicone Sealants:
1. General Electric Silicones, (800) 295-2392, internet www.gesilicones.com
a. "SCS1700 Sanitary – Mold/Mildew Resistant Silicone", one component 100% silicone, fungicidal based sealant.
b. "SCS2700 Silpruf Silicone" one component medium modulus, natural cure silicone all purpose sealant.
c. "Silglaze II SCS2800- Glazing Sealant" one component, 100% silicone based sealer.
d. "GE Paintable Silicone" one component paintable silicone.
e. "SCS1009 Silicone Sealant" one-component acetoxy silicone for general purpose sealing and bonding
2. Dow Corning Silicones, (989)496-4000, www.dowcorning.com
a. "Dow 795" – one component, medium modulus, natural cure silicone.

C. Firestopping Sealants: 3M Fire Protection Products, (800) 328-1687, internet www.3M.com/firstop
1. "3M Fire Barrier CP 25WB+ Caulk" or approved equal

D. Joint backing: Non-absorptive, non-staining compressible, non-gassing, polyethylene foam backer rod compatible with joint sealants.

3.1 Installation:

A. Preparation: Clean and prepare joints prior to installing sealers:
1. Wipe shipping oils from surfaces to be sealed. Remove protective films and/or install joint backer rod if joint is larger than ¼" in width.

B. Installation: Install joint sealant materials in strict accordance with manufacturer's installation instructions.
1. Apply sealants in a uniform, continuous bead without gaps or air pockets. Hand tool and finish all joints so that a smooth, small, lip free uniform line is created along the substrate being shot. Remove any excess materials from tooled edges and ends of joint.
2. Install joint sealants to a depth no more than ½ the width of the joint.
3. Install sealants by proven techniques that result in sealants directly contacting and fully wetting joint substrates, completely filling recesses provided for each joint configuration, and providing uniform, cross-sectional shapes and depths relative to joint widths which allow optimum sealant movement capability.
4. Immediately, after sealant application, and prior to time skinning or curing begins, tool sealants to form smooth, uniform beads of configuration indicated to eliminate air pockets, and to ensure contact and adhesion of sealant with sides of joint. Remove excess sealants from surfaces adjacent to joint. Do not use tooling agents which discolor sealants or adjacent surfaces or are not approved by sealant manufacturer.
5. Clean off excess sealants or sealant smears adjacent to joints as work progresses by methods and with cleaning materials approved by manufacturers of joint sealers and of products in which joints occur.

4.1 Sealant Schedule:

A. Kitchen Area:
- Provide a continuous bead of white GE SCS1700 silicone at the following locations:
1. Ceiling grid to FRP wall panels
2. Base of FRP wall panels to T.O. specified base material.
3. Walk in cooler walls to FRP wall panels.
4. Stainless closure pieces at cooler walls to FRP wall panels.
5. FRP/stainless corner guards to FRP wall panels.
6. Ceiling tile pipe penetrations.
7. Wall pipe penetrations and/or escutcheons perimeters. (water & gas lines).
8. Mop sink stainless surround perimeter to walls.
9. FRP closure panel, at top of cooler, to cooler walls.
10. FRP wall panels to hollow metal door frames.
11. Coke line bundle to PVC cap.
12. FRP inside corner pieces to FRP wall panels. Both sides of corner piece.
13. Battery backup cover panel to FRP.
14. Faucet's to FRP wall panels.
15. FRP wall panels to quarry tile cove base.
16. FRP to aluminum plate at walk thru.
17. Menu board light bracket to ceiling.
18. Mop sink base at quarry tile.
19. All sinks (multi-compartment, hand, mop and prep) to FRP/tile walls.
20. Paper towel dispensers & soap dispensers to FRP/tile walls.

- Provide a continuous bead of aluminum GE SCS1009 silicone at the following locations:
1. Stainless closer pieces, at sides of cooler walls - to cooler walls.
2. Stainless or aluminum plate closure pieces to diamond plate at cooler walls.
3. Diamond plate panel seam joints.
4. Diamond plate perimeter to cooler walls.
5. Base of diamond plate to quarry tile cove base.
6. Stainless closure panel, at top of cooler walls, to cooler walls.
7. Top of quarry tile cove base to cooler walls at inside of cooler.
8. Cooler wall/diamond plate penetrations.
9. Cooler door hinges and handles to diamond plate. DO NOT caulk door locking unit.
10. Stainless wrap at hollow metal door frame.
11. Stainless mop surround to stainless corners on mop sink.
12. Base of stainless corner pieces to schlutter strip at base.
13. Exit door threshold perimeters. To frame and floor, interior and exterior.

- Provide a continuous bead of dark gray GE SCS2000 silicone at the following locations:
1. Base of hollow metal door jambs to quarry tile floor.

B. Managers Office:
- Provide a continuous bead of white GE SCS1700 silicone at the following locations:
1. Ceiling grid to FRP wall panels.
2. Perimeter of manager's desk to FRP wall panels.
3. Hollow metal door frame to FRP wall panels.
4. Top and ends of coat hanger bracket to FRP walls.
5. Base of FRP wall panels to quarry tile base.
6. Ceiling tile wire/pipe penetrations.
7. FRP inside corners to FRP wall panels. Both sides of corner piece.
8. Base of FRP wall panels to quarry tile.

- Provide a continuous bead of black or light bronze (use color of safe) GE SCS2000 silicone at the following locations:
1. Base of safe to floor.

C. Cooking Area:
- Provide a continuous bead of white GE SCS1700 silicone at the following locations:
1. Top of wall tile to sheetrock ceiling.
2. Ceiling diffusers perimeters to sheetrock ceiling.
3. Ceiling pipe penetrations.
4. Wall tile to aluminum walk thru surround.
5. Tile wall penetrations/escutcheons perimeters.
6. FRP wall panels to sheetrock ceilings.
7. FRP wall panels to aluminum end wall plates.
8. FRP inside corners to FRP wall panels. Both sides of corner piece.
9. Sink to white wall tile.
10. Paper towel dispenser/soap dispenser to white tile.
11. POS/Serving counter to wall tile.
12. Stainless shelf behind grill to wall tile.
13. Faucets to ceramic wall tile.

- Provide a continuous bead of aluminum GE SCS1009 silicone at the following locations:
1. Joint between hood and closure skirt.
2. Joint between hood support and hood. Both sides.
3. Connection joint between stainless shelf behind grill.
4. Hood to tile walls & sheetrock ceiling.
5. Hood gusset to wall tile on both sides.
6. Sink to bronze wall tile.
7. Paper towl dispenser/soap dispenser to bronze tile.
8. DML counter to bronze tile.

- Provide a continuous bead of dark gray GE SCS2000 at the following locations:
1. Base of equipment to concrete curbs/quarry tile.

- Provide a continuous bead of bronze GE SCS2097 at the following locations:
1. Ceramic tile inside corners.
2. Ceramic tile to aluminum end wall plates.

D. Restrooms:
- Provide a continuous bead of white GE SCS1700 silicone at the following locations:
1. Top of FRP to sheetrock ceiling or top of FRP trim to sheetrock wall.
2. Perimeter of toilets/urinals to floor or FRP.
3. Perimeter of mirror to FRP.
4. Sink to wall.
5. Perimeter of paper towel/garbage unit to wall.
6. Toilet paper/napkin disposals units to walls.
7. Stainless shelf to wall.
8. Wall penetrations under sink and or escutcheons to perimeters.
9. Hollow metal door frames to FRP.
10. Base of FRP wall panels to top of wall base.
11. FRP inside corners to FRP wall panels.

- Provide a continuous bead of black GE SCS2000 silicone at the following locations:
1. Base of black rubber wall base to floor.

- Provide a continuous bead of dark gray GE SCS2000 silicone at the following locations:
1. Base of hollow metal door frames to floor.

E. Dining area:
- Provide a continuous bead of white GE SCS1700 silicone at the following locations:
1. Wall tile to sheetrock walls.
2. Perimeter of aluminum storefront/windows/entrances to sheetrock walls.
3. Wainscot wall panels (Stonewood or other) to painted walls.
4. Diffuser/louvers perimeters to sheetrock walls.
5. Hollow metal door frames to painted walls - if needed.
6. Frame of service line counter to tile (joint to be caulked behind front face panels of counter).
7. Wall tile at serving line wall to POS counter.

- Provide a continuous bead of black GE SCS2000 silicone at the following locations:
1. Base of black rubber to floor (concrete or quarry tile) and gyp. bd. wall.
2. Wainscot (Stonewood or other) wall panels to sill of aluminum storefront/ windows.
3. Vertical joints of wainscot (Stonewood or other) wall panels to frames/painted walls/tile (ONLY if joint is uneven or plywood is showing).
4. Stonewood panels at serve line.

- Provide a continuous bead of aluminum GE SCS1009 silicone at the following locations:
1. Base of garbage surround to floor.

- Provide a continuous bead of Dow 795 silicone at the following locations:
1. Sill of aluminum storefronts to concrete or tile floor. Color to be determined per store to match storefront (Charcoal/Anodized Aluminum/Dark Bronze).

F. Utensil Counter:
- Provide a continuous bead of aluminum GE SCS1009 silicone at the following locations:
1. Stainless countertop to backsplash. Horizontal & vertical joints.
2. Base of Coke machine to countertop.
3. Perimeter of tea drain tray to countertop.
4. Stainless backsplash to white tile walls/painted walls.

- Provide a continuous bead of white GE SCS1700 silicone at the following locations:
1. Coke line bundle to PVC cap.

G. Fire Rated Walls:
- Provide a continuous bead of 3M 25WB+ at the following locations:
1. Wall/ceiling penetrations in rated walls.

H. Exterior Joints:
- Provide a continuous bead of Tremco Dymeric limestone urethane sealant at the following locations:
1. Sidewalk/concrete expansion joints.

- Provide a continuous bead of Dow 795 silicone or Tremco Dymeric 240 FC at the following locations:
1. Hollow metal door frames.
2. EIFS to abutting services.
3. Penetrations in EIFS.
4. Face brick or block control joints.
5. Perimeter of Aluminum Storefronts.
*Colors to be determined per store to match adjacent material colors. Verify with Tenant Construction Manager and Architect.
- For "Fog" EIFS use Tremco - "Natural White"
- For "Knight's Armor" EIFS use Sonneborn - "Charcoal Gray" #276-U
- For white brick use Tremco - "China White"
- Provide a continuous bead of aluminum GE SCS1009 silicone at the following location:
1. CO2 fill port stainless box.
2. Faucet for hose. (Please note: color to be determined per store. Verify with Chipotle Construction Manager and Architect).

Consultant:
R/A
Red Architecture
589 W. NATIONWIDE BLVD. SUITE B
COLUMBUS, OHIO 43215 (614) 487-8770

BID DOCUMENTS ONLY NOT FOR CONSTRUCTION

COPYRIGHT 2026
ALL DRAWINGS AND SPECIFICATIONS SHALL REMAIN THE PROPERTY OF RED ARCHITECTURE LLC AND MAY NOT BE USED, DUPLICATED, OR ALTERED WITHOUT WRITTEN CONSENT OF THE ARCHITECT.

ECP PARTNERS

CMG HIGHLAND CITY SHELL, FL
TBD US 98
LAKELAND, FL 33812

Issue Record:

02/25/26	PERMIT SET
02/25/26	BID SET

Revisions:

Drawn: JLH,PH
Checked: DM,DF

Project No. EPL002

Contents:

ARCHITECTURAL SPECIFICATIONS

G013

DIVISION 8 - DOORS AND WINDOWS

SECTION 08110 - STEEL DOORS AND FRAMES

1.1 General: Tenant to provide steel doors and frames as shown and specified.

A. Standards: Materials and construction shall conform to the following:
1. ANSI A250.8-2009 "Specifications for Standard Steel Doors and Frames."
2. ANSI A250.11-01 "Erection Instructions for Steel Frames."
3. SDI 122-99 " Installation for Standard Steel doors and Frames.

B. Manufacturer: A member of the Steel Door Institute (SDI).

2.1 Materials:

A. Steel Doors:
1. Interior: Heavy-duty Level 2, physical performance B, Model 2 seamless construction, ASTM A1008, 18 gage cold-rolled steel face sheets, manufacturer's standard core.

2. Exterior: Extra heavy-duty Level 3, physical performance A, Model 2 seamless construction, ASTM A1008, 16 gage cold-rolled steel face sheets; tops and bottoms closed with flush galvanized steel caps, manufacturer's standard plastic foam insulating core.

B. Steel Frames: ASTM A1008, 16 gage cold-rolled steel.
1. Provide combination buck, jamb and trim type frames for 1-3/4" thick doors, unless otherwise indicated.
2. Interior and exterior frames: Set-up welded type with mitered corners, reinforced, fully seam welded with exposed welds ground smooth.

C. Door and frame fabrication:
1. Provide cutouts for mortised hardware, accurately located and made to fit hardware. Provide closer reinforcement for all doors with surface mounted door closers.
2. Punch frames and factory install rubber door silencers.
3. Provide minimum three anchors of suitable design for each jamb.
4. Provide floor clip on bottom of each jamb. Provide angle spreaders at bottom of each set-up frame.

D. Shop painting: Clean and paint exposed surfaces of steel door and frame units. Apply one baked-on shop coat of rust-inhibitive prime paint in accordance with ANSI A250.10, unless doors and frames are used at the restrooms or as indicated on door hardware and finish schedule. Provide a uniformly finished surface ready to receive finish paint.

3.1 Installation:

A. Install frames plumb, level, rigid, and in true alignment as recommended in ANSI A250.11.

B. Install doors plumb and in true alignment and fastened to achieve the maximum operational effectiveness and appearance as recommended in SDI 122.

SECTION 084113 - ALUMINUM-FRAMED ENTRANCES AND STOREFRONTS

1.1 General: Provide aluminum entrances and storefronts as shown and specified.

1.2 Related Documents:

A. Drawings and general provisions of the Contract, including General and Supplementary Conditions and Division 01 Specification Sections, apply to this section.

B. Standards: Materials and construction shall conform to the following:
1. AAMA SFM-1-87 "Aluminum Storefront and Entrance Manual."

1.3 Summary:

A. Section includes:
1. Storefront Systems
2. Storefront Entry Systems
3. Brake Metal Trim

1.4 Performance Requirements:

A. General Performance: Aluminum-framed storefront system shall withstand the effects of the following performance requirements without exceeding performance criteria or failure due to defective manufacture, fabrication, installation, or other defects in construction:
1. Design Wind Loads: Determine design wind loads applicable to the Project from basic wind speed indicated in miles per hour, according to ASCE 7, Section 6.5, "Method 2-Analytical Procedure," based on mean roof heights above grade indicated on Drawings.
   a. Basic Wind Speed (MPH): Determine to meet local codes listed on A000
   b. Importance Factor: (1.00)
   c. Exposure Category (A, B, C, D): Determine to meet local codes listed on A000

B. Storefront System Performance Requirements:
1. Wind loads: Provide storefront system; include anchorage, capable of withstanding inward and outward wind load design pressures meeting local codes listed on sheet A000.
2. Air Infiltration:
   a. Air Infiltration for storefront frame system: The test specimen shall be tested in accordance with ASTM E 283. Air infiltration rate shall not exceed 0.06 cfm/ft. sq. at a static air pressure differential of 6.24 psf.
   b. Air Infiltration for storefront entrances: For single acting offset pivot or butt hung entrances in the closed and locked position, the test specimen shall be tested in accordance with ASTM E 283 at a pressure differential of 6.24 psf (300 Pa) for single doors and 1.567 psf (75 PA) for pairs of doors. A single 3'0" x 7'0" entrance door and frame shall not exceed 0.50 cfm per square foot. A pair of 6'0" x 7'0" entrance doors and frame shall not exceed 1.0 cfm per square foot.
3. Water Resistance: The test specimen shall be tested in accordance with ASTM E 331. There shall be no leakage at a minimum static air pressure differential of 8 psf as defined in AAMA 501.
4. Uniform Load: A static air design load of 20 psf shall be applied in the positive and negative direction in accordance with ASTM E 330. There shall be no defection in excess of L/175 of the span of any framing member. At a structural test load equal to 1.5 times the specified design load, no glass breakage or permanent set in the framing members in excess of 0.2% of their clear spans shall occur.
5. Thermal Transmittance (U-factor): When tested to AAMA Specification 1503, the thermal transmittance (U-factor) shall be not more than:
   a. Glass to Exterior - 0.47 (low-e)
6. Condensation Resistance (CRF): When tested to AAMA Specification 1503, the condensation resistance factor shall not be less than:
   a. Glass to Exterior - 70 frame and 69 glass (low-e)
7. Sound Transmission Class (STC) and Outdoor-Indoor Transmission Class (OITC): When tested to AAMA Specification 1801 and in accordance with ASTM E1425 and ASTM E90, the STC and OITC Rating shall not be less than:
   a. Glass to Exterior - 38 (STC) and 31 (OITC)

1.5 Submittals:

A. Product Data: Include construction details, material descriptions, dimensions of individual components and profiles, hardware, finishes, and installation instructions for each type of aluminum frame storefront system and storefront entrance doors indicated.

B. Shop Drawings: Include plans, elevations, sections, details, hardware, and attachments to work, operational clearances and installation details.

C. Samples for Initial Selection: For units with factory-applied color finishes including samples of hardware and accessories involving color section.

1.6 Quality Assurance

A. Installer Qualifications: An installer which has had successful experience with installation of the same or similar units required for the project and other projects of similar size and scope

B. Manufacturer Qualifications: A manufacturer capable of providing aluminum framed storefront system that meet or exceed performance requirements indicated and of documenting this performance by inclusion of rest reports, and calculations.

C. Source Limitations: Obtain aluminum framed storefront system and storefront entrance doors through one source from a single manufacturer.

D. Product Options: Drawings indicate size, profiles, and dimensional requirements of aluminum framed storefront system and are based on the specific system indicated. Do not modify size and dimensional requirements.
1. Do not modify intended aesthetic effects, as judged solely by Architect, except with Architect's approval. If modifications are proposed, submit comprehensive explanatory data to Architect for review.

1.7 Project Conditions:

A. Field Measurements: Verify actual dimensions of a aluminum framed storefront openings by field measurements before fabrication and indicate field measurements on Shop Drawings.

1.8 Warranty

A. Manufactures Warranty: Submit, for Owner's acceptance, manufacturer's standard warranty.
1. Warranty Period: Two (2) years from Date of Substantial Completion of the project provided however that the Limited Warranty shall begin in no event later than six months from date of shipment by manufacturer.

2.1 Manufacturers:

A. Manufacturer: Kawneer Company Inc., Contact: Doug Hess, Phone: 317-771-9265; email:doug.hess@arconic.com

1. Basis-of-Design Product Storefront Framing:
   a. Trifab Versaglaze 451T (thermal) Storefront System
      i. 2" x 4-1/2" System Dimensions
      ii. Glass: Exterior (Front-Set)

2. Basis-of-Design Product Storefront Entrances:
   a. The door stile and rail face dimensions of the 500-Wide Stile entrance door will be as follows or as indicated on Drawings: Door: 500; Vertical Stile: 5"; Top Rail: 5"; Bottom Rail: 10"
   b. Major portions of the door members to be 0.125" nominal in thickness and glazing molding to be 0.05" thick.
   c. Glazing gaskets shall be either EPDM elastometric extrusions or a thermoplastic elastomer.
   d. Provide adjustable glass jacks to help center the glass in the door opening.

B. Alternate Storefront Systems only when approved by Arch PM and Chipotle DM.
1. YKK, YES 45 TU Storefront System - 2" x 4-1/2" nominal dimension; Thermal; Front-Set
2. Oldcastle, Series 3000 Thermal MultiPlane Storefront System - 2" x 4-1/2" nominal dimension; Thermal; Front-Set
3. US Aluminum, Series FT451 - 2" x 4-1/2" nominal dimension; Thermal; Front-Set
4. EFCO, Series 403 (T) Storefront System - 2" x 4-1/2" nominal dimension; Thermal
5. Wausau, TU24000 Storefront System - 2" x 4-1/2" nominal dimension; Thermal

2.2 Materials:

A. Provide aluminum entrances and storefront matching the existing building aluminum entrances and storefronts, unless otherwise indicated.

B. Aluminum Frame Extrusions: Alloy and temper recommended by aluminum storefront manufacturer for strength, corrosion resistance, and application of required finish and not less than 0.070" wall thickness at any location for the main frame and complying with ASTM B 221: 6063-T6 alloy and temper.

C. Aluminum Storefront Entrance Extrusions:Alloy and temper recommended by aluminum-framed glass door manufacturer for strength, corrosion resistance, and application of required finish and not less than 0.090" wall thickness at any location for the main frame and sash members.

D. Fasteners: Aluminum, nonmagnetic stainless steel or other materials to be non-corrosive and compatible with aluminum window and door members, trim hardware, anchors, and other components.

E. Anchors, Clips, and Accessories: Aluminum, nonmagnetic stainless steel, or zinc-coated steel or iron complying with ASTM B 633 for SC 3 severe service conditions, or other suitable zinc coating; provide sufficient strength to withstand design pressure indicated.

F. Reinforcing Members: Aluminum, nonmagnetic stainless steel, or nickel/chrome-plated steel complying with ASTM B 456 for Type SC 3 severe service conditions, or zinc-coated steel or iron complying with ASTM B 633 for SC 3 severe service conditions or other suitable zinc coating; provide sufficient strength to withstand design pressure indicated.

G. Sealant: For sealants required within fabricated storefront system, provide permanently elastic, non-shrinking, and non-migrating type recommended by sealant manufacturer for joint size and movement.

H. Tolerances: Reference to tolerances for wall thickness and other cross-section dimensions of storefront members are nominal and in compliance with AA Aluminum Standard Data.

2.3 Storefront Framing System:

A. Thermal Barrier: Thermal Break shall be designed in accordance with AAMA TIR-A8 and tested in accordance with AAMA 505.
1. Kawneer IsoLock Thermal Break with a 1/4" separation consisting of a two-part chemically curing, high-density polyurethane, which is mechanically and adhesively joined to aluminum storefront sections.

B. Brackets and Reinforcements: Manufacturer's standard high-strength aluminum with non-staining, nonferrous shims for aligning system components.

C. Fasteners and Accessories: Manufacturer's standard corrosion-resistant, non-staining, non-bearing fasteners and accessories compatible with adjacent materials. Where exposed shall be stainless steel.

D. Perimeter Anchors: When steel anchors are used, provide insulation between steel material and aluminum material to prevent galvanic action.

E. Packing, Shipping, Handling and Unloading: Deliver materials in manufacturer's original, unopened, undamaged containers with identification labels intact.

F. Storage and Protection: Store materials protected from exposure to harmful weather conditions. Handle storefront material and components to avoid damage. Protect storefront material against damage from elements, construction activities, and other hazards before, during and after storefront installation.

2.4 Glazing Systems:

A. Glazing: As specified in Section 08800 - Glazing.

B. Glazing Gaskets: Manufacturer's standard compression types; replaceable, extruded EPDM rubber.

C. Spacers and Setting Blocks: Manufacturer's standard elastomeric type.

D. Bond-Breaker Tape: Manufacturer's standard TFE-fluorocarbon or polyethylene material to which sealants will not develop adhesion.

E. Glazing Sealants: For structural-sealant-glazed systems, as recommended by manufacturer for joint type, and as follows:
1. Structural Sealant: ASTM C 1184, single-component neutral-curing silicone formulation that is compatible with system components with which it comes in contact, specifically formulated and tested for use as structural sealant and approved by a structural-sealant manufacturer for use in aluminum-framed systems indicated.
   a. Color: Black
2. Weatherseal Sealant: ASTM C 920 for Type S, Grade NS, Class 25, Uses NT, G, A, and O; single-component neutral-curing formulation that is compatible with structural sealant and other system components with which it comes in contact; recommended by structural-sealant, weatherseal-sealant, and aluminum-framed-system manufacturers for this use.
   a. Color: Matching structural sealant.

2.5 Entrance Door Systems:

A. Entrance Door Hardware: As specified in Section 08710 Door Hardware.

2.6 Accessory Materials:

A. Joint Sealants: For installation at perimeter of aluminum-framed systems, as specified in section 07900 - Joint Sealers

2.7 Storefront Framing Fabrication:

A. Framing Members, General: Fabricate components that, when assembled, have the following characteristics:
1. Profiles that are sharp, straight, and free of defects or deformations.
2. Accurately fit joints; make joints flush, hairline and weatherproof.
3. Means to drain water passing joints, condensation within framing members, and moisture migrating within the system to exterior.
4. Physical and thermal isolation of glazing from framing members.
5. Accommodations for thermal and mechanical movements of glazing and framing to maintain required glazing edge clearances.
6. Provisions for field replacement of glazing.
7. Fasteners, anchors, and connection devices that are concealed from view to greatest extent possible.

B. Mechanically Glazed Framing Members: Fabricate for flush glazing without projecting stops.

C. Structural-Sealant-Glazed Framing Members: Include accommodations for using temporary support device to retain glazing in place while structural sealant cures.

D. Storefront Framing: Fabricate components for assembly using manufacturers standard installation instructions.

E. After fabrication, clearly mark components to identify their locations in Project according to Shop Drawings.

2.8 Storefront Entrance Door Fabrication:

A. Fabricate aluminum-framed glass entrance doors in sizes indicated. Include a complete system for assembling components and anchoring doors.

B. Fabricate aluminum-framed glass doors that are reglazable without dismantling perimeter framing.
1. Door corner construction shall consist of mechanical clip fastening, SIGMA deep penetration plug welds and 1-1/8" long fillet welds inside and outside of all four corners. Glazing stops shall be hook-in type with EPDM glazing gaskets reinforced with non-stretchable cord.
2. Accurately fit and secure joints and corners. Make joints hairline in appearance.
3. Prepare components with internal reinforcement for door hardware.
4. Arrange fasteners and attachments to conceal from view.

C. Weather Stripping: Provide weather stripping locked into extruded grooves in door panels or frames as indicated on manufactures drawings and details.

2.9 Aluminum Finishes:

A. Finish designations prefixed by AA comply with the system established by the Aluminum Association for designating aluminum finishes.

B. Factory Finishing:
1. Anodized; Kawneer Permanodic® AA-M10C21A44, AAMA 611, Architectural Class I Color Anodic Coating (Color Black)
   a. Alt: Kawneer Permafluor (70% PVDF), AAMA 2605, Fluoropolymer Coating (Color: Black or as noted on Drawings)
2. Finishing for alternate storefront specifications to be verified by Arch PM and Chipotle DM

2.10 Brake Metal Trim, min 18ga:

A. Shop Drawings: Show layout and elevations, dimensions and thickness of panels, connections, details and location of joints, sealants and gaskets, method of anchorage, number of anchors, supports, reinforcement, trim, flashings, and accessories.
1. Show actual field measurements on shop drawings.
2. Differentiate between shop and field fabrication.
3. Indicate substrates and adjacent work with which the fabrications must be coordinated.
4. Include large-scale details of anchorages and connecting elements.
5. Include large-scale or schematic exploded or isometric diagrams to fully explain flashing at a scale of not less than 1-1/2 inches per 12 inches (1:10)

B. Refer to Section 05580 for further details

3.1 Examination:

A. Examine openings, substrates, structural support, anchorage, and conditions, with Installer present, for compliance with requirements for installation tolerances and other conditions affecting performance of work. Verify rough opening dimensions, levelness of sill plate and operational clearances. Examine wall flashings, vapor retarders, water and weather barriers, and other built-in components to ensure a coordinated, weather tight framed aluminum storefront system installation.
1. Masonry Surfaces: Visibly dry and free of excess mortar, sand, and other construction debris.
2. Wood Frame Walls: Dry, clean, sound, well nailed, free of voids, and without offsets at joints. Ensure that nail heads are driven flush with surfaces in opening and within 3 inches of opening.
3. Metal Surfaces: Dry; clean; free of grease, oil, dirt, rust, corrosion, and welding slag; without sharp edges or offsets at joints.
4. Proceed with installation only after unsatisfactory conditions have been corrected.

3.2 Installation:

A. Comply with Drawings, Shop Drawings, and manufacturer's written instructions for installing aluminum framed storefront system, aluminum swing storefront entrance doors, accessories, and other components.

B. Install aluminum framed storefront system and storefront doors level, plumb, square, true to line, without distortion or impeding thermal movement, anchored securely in place to structural support, and in proper relation to wall flashing and other adjacent construction.

C. Set sill members and door threshold in bed of sealant or with gaskets, as indicated, for weather tight construction.

D. Install aluminum framed storefront system and components to drain condensation, water penetrating joints, and moisture migrating within sliding door to the exterior. Refer to section 07900 - Joint Sealers.

E. Separate aluminum and other corrodible surfaces from sources of corrosion or electrolytic action at points of contact with other materials.

F. Install aluminum storefront framing system glass and glazing, in accordance with section 08800 and the manufacturer's requirements.

3.3 Adjusting, Cleaning, and Protection:

A. Clean aluminum surfaces immediately after installing aluminum framed storefronts. Avoid damaging protective coatings and finishes. Remove excess sealants, glazing materials, dirt, and other substances.

B. Clean glass immediately after installation. Comply with glass manufacturer's written recommendations for final cleaning and maintenance. Remove nonpermanent labels, and clean surfaces.

C. Remove and replace glass that has been broken, chipped, cracked, abraded, or damaged during construction period.

SECTION 085619 - PASS-THRU WINDOW

1.1 General: Provide door hardware as shown and specified.

A. Standards: Materials and installation shall conform to the following:
1. ASTM A240 - Heat-Resisting Chromium and Chromium-Nickel Stainless Steel Plate, Sheet, and Strip for Pressure Vessels.
2. ASTM A653 - Steel Sheet, Zinc-Coated (Galvanized) or Zinc-Iron Alloy-Coated (Galvannealed) by the Hot-Dip Process.
3. ASTM B209 - Aluminum and Aluminum-Alloy Sheet and Plate.
4. ASTM B221 - Aluminum and Aluminum-Alloy Extruded Bars, Rods, Wire, Profiles, and Tubes.
5. ASTM B580 - Standard Specification for Anodic Oxide Coatings on Aluminum.
6. ASTM B680 - Standard Test Method for Seal Quality of Anodic Coatings on Aluminum by Acid Dissolution.
7. ASTM C1048 - Heat-Treated Flat Glass--Kind HS, Kind FT Coated and Uncoated Glass.
8. ASTM C1172 - Standard Specification for Laminated Architectural Flat Glass.
9. ASTM E774 - Standard Specification for Sealed Insulating Glass Units.
10. Aluminum Association AA DAF-45 - Designation System for Aluminum Finishes.

B. Quality Assurance:
1. Manufacturer Qualifications: Minimum of 25 years successful experience continuously manufacturing pass-thru windows.
2. Installer Qualifications: Installer shall have five years experience manufacturing and fabricating windows of similar type and scope as those specified in this section.

2.1 Materials:

A. Acceptable Manufacturers. Arch PM to verify required manufacturer per Tenant's assignment.
1. Quikserv; Toll Free: 1.800.388.8307; Email: sales@quikserv.com; Web: https://www.quikserv.com/
2. ReadyAccess; Toll Free: 1.800.621.5045; Email: ready@ready-access.com; Web: https://www.ready-access.com
   a. If support is needed for ReadyAccess install use the website https://www.ready-access.com/parts-service/#form

B. No substitutions allowed. Requirements for manufacturer, design, grade, function, finish, size and other distinctive qualities of each type of door hardware are indicated on the drawings.

2.2 In-Line Side Sliding Automatic Window and Air Curtain

A. Standard Custom Side Sliding Windows – Arch PM to verify manufacturer with Tenant.
   a. GC to use specification called out on storefront details sheet and/or as directed by Tenant Arch PM.

• Quikserv Custom Automatic Side Sliding Window (Model: SST-4035E-CHIPOTLE): 45 -1/2"W x 41-3/4"H window with 17-3/4" tall transom and (2) sidelights at 29 1/4"W x 41-3/4"H; Complete Unit Size 104"W x 59-1/2"H

1. Service Opening: 19"W x 29-3/4"H
2. Finish: Dark Bronze Anodized
3. Glass: 1" Clear Tempered unit + Low E (Solarban 60e) for fixed and moving panel, sidelights and transom
4. 'CHIPOTLE' package includes pre-wired air curtain with relay to sync operation with window.
   a. Arch PM to verify if heated or ambient air curtain is required per Tenant assignment. Air Curtain mounts to transom.
      i. Heated Air Curtain: Model: QSV1025EJ-040-BK
      ii. Ambient Air Curtain: Model: QSK1025AA-BK
5. Refer to interior elevations (A700s) for direction of opening for ordering.

• ReadyAccess Automatic Side Sliding Window: 47 -1/2"W x 43-1/2"H window with 16" tall transom and (2) sidelights at 28 1/4"W x 59-1/2"H; Complete Unit Size 104"W x 59-1/2"H

1. Service Opening: 19"W x 35"H
2. Finish: Dark Bronze Anodized
3. Glass: 3/4" Clear Tempered unit + Low E (Solarban 70XL) for fixed & moving panel, sidelights and transom
4. Arch PM to verify if heated or ambient air curtain is required per Tenant assignment.
   a. Heated Air Curtain: Model: RAC-E-22
   b. Ambient Air Curtain: Model: RAC-22
5. Refer to exterior elevations (A300s) for direction of opening for ordering.

B. Alternate California Code Option

1. ReadyAccess: Window 47-1/2" W x 35-3/4"H with double-split transom for air curtain and 10" and (2) sidelights at 28-1/4"W x 59-1/2"H; Complete Unit Size 104"W x 59-1/2"H
   a. Service Opening:15-1/4"W x 28"H, limited to meet CA code.
   b. Ambient Air Curtain, AA100, and relay switch kit included with the West Coast Window package.

2. Quikserv Model: SS-4035-E-CHIPOTLE-CALI, same as above except as noted.
   a. Service Opening: 28"W x 15-3/8"H, limited to meet CA code.
   b. 'CHIPOTLE' package includes pre-wired ambient air curtain with relay to sync operation with window Model: QSK1025AA-BK. Air curtain mounts to transom.

C. Alternate Impact-Resistant and Florida Product Approved Option, Miami Dade Horizontal Bi-Parting Impact Slider

1. Quikserv Model: BP-7241E-IP-CHIPOTLE, Complete Unit Size: 72"W x 41"H.
   a. Service Opening: 29-1/2"W x 27"H
   b. Rough Opening: 72-1/2"W x 41-1/2"H
   c. Glass: Impact Resistant Glass
   d. 'CHIPOTLE' package includes ambient air curtain
      i. Ambient Air Curtain: Model: QSK1025AA-BK, Part Number: 9345.
      ii. Do not mount directly to window, mount on wall above.
   e. Miami-Dade NOA #18-0814.02

2.3 Electrical Requirements

A. Quikserv Electrical Windows: 120V / 60 Hz, 20-amp branch circuit, single phase. Power supplied through base of window. Conforms to UL Standard 325 – Certified to CAN/CSA C22.2 NO. 247. Confirm with Electrical Drawings.

1. Heated Air Curtain for Custom Side Sliding Window (Model: SS-4035-E-CHIPOTLE)
   a. Separate 208V circuit and Power Supply required for heated air curtain. Air curtain pre-wired through window frame with power supply routed to base of window. Confirm with Electrical Drawings.
2. Ambient Air Curtain for Custom Side Sliding Window (Model: SS-4035-E-CHIPOTLE) and Alternate California Code Option: Model: SS-4035-E-CHIPOTLE-CALI
   a. Separate circuit not required. Window pre-wired to power and sync operation with air curtain.
3. Ambient Air Curtain for Alternate Impact-Resistant and Florida Product Approved Option (Model: BP-7241E-IP-CHIPOTLE):
   a. Connect to main control board on window to power and synchronize operation with opening and closing of window.

B. ReadyAccess Electrical Windows: 115V / 60 Hz, 15-amp dedicated circuit required. Run power to header on fixed panel side.

1. AA300 Heated Air Curtain
   a. Separate 208V /60 hz /40-amp single phase circuit required.
2. AA100 Ambient Air Curtain (Standard and CA window)
   a. Separate 120V / 60hz / 15-amp single phase circuit required. Run power to center of window above header.

3.1 Installation

A. Install in accordance with manufacturer's instructions.
B. Install pass-thru windows plumb, level, square, true to line, and without warp or rack. Maintain dimensional tolerances and alignment with adjacent Work.
C. Install thermal isolation where components penetrate or disrupt building insulation. Pack fibrous insulation in shim spaces at perimeter of assembly to maintain continuity of thermal barrier.
D. Install pass-thru window components weathertight.
E. Anchor pass-thru windows securely in place to supports. Use attachment methods permitting adjustment for construction tolerances, irregularities, alignment, and expansion and contraction.
F. Separate aluminum from other metal surfaces with bituminous coatings or other means approved by Architect.
G. Coordinate installation of related sheet metal flashing as specified in Section 07 62 00 - Sheet Metal Flashing and Trim.
H. Install perimeter joint sealants as specified in Section 07 91 23 - Backer Rods.

SECTION 08710 - DOOR HARDWARE

1.1 General: Provide door hardware as shown and specified.

A. Standards: Materials and installation shall conform to the following:
1. ANSI A117.1-2009 Accessible and Usable Buildings and Facilities.
2. ANSI/BHMA A156 Series Builders Hardware

B. Quality Assurance:
1. Codes and standards: Provide hardware complying with local Building Code requirements and the Tenant's standards for keying and security systems.
2. Project scheduling: Performed by an Architectural Hardware Consultant (AHC).
3. Package each item of hardware and each lockset, complete with all screws, anchors, installation instructions and templates. Identify package indexing with corresponding item number of the hardware schedule.
4. After hardware schedule acceptance, provide necessary templates or physical hardware to required trades for cutting, reinforcing, or preparing their products to receive hardware. Furnish templates to metal door manufacturer's.

2.1 Materials:

A. No substitutions allowed. Requirements for manufacturer, design, grade, function, finish, size and other distinctive qualities of each type of door hardware are indicated on the drawings.

B. Review the keying system with the Tenant and provide the type required.

3.1 Installation

A. Install each hardware item in strict accordance with manufacturer's installation instructions and recommendations. Securely fasten all attached parts. Fit faces of mortised parts snug and flush. Verify operating parts move freely and smoothly without binding or sticking, without excessive clearance.

B. Set units level, plumb and true to line and location. Adjust and reinforce attachment substrate as required for proper installation and operation. Drill and countersink units that are not factory prepared for anchorage fasteners. Space fasteners and anchors in accordance with industry standards.

Consultant:
R/A
Red Architecture
589 W. NATIONWIDE BLVD. SUITE B
COLUMBUS, OHIO 43215 (614) 487-8770

BID DOCUMENTS ONLY NOT FOR CONSTRUCTION

COPYRIGHT 2026
ALL DRAWINGS AND SPECIFICATIONS SHALL REMAIN THE PROPERTY OF RED ARCHITECTURE LLC AND MAY NOT BE USED, DUPLICATED, OR ALTERED WITHOUT WRITTEN CONSENT OF THE ARCHITECT.

ECP PARTNERS

CMG HIGHLAND CITY SHELL, FL
TBD US 98
LAKELAND, FL 33812

Issue Record:

02/25/26	PERMIT SET
02/25/26	BID SET

Revisions:

Drawn: JLH,PH
Checked: DM,DF

Project No. EPL002

Contents:

ARCHITECTURAL SPECIFICATIONS

G014

C. Mount hardware units at heights indicated in DHI "Recommended Locations for Builders Hardware", unless otherwise required to comply with requirements of governing codes and regulations. Conform to ANSI A117.1 and ADAGG guidelines for accessibility.
1. Top Butts: 5 inches; top of butt from head of frame.
2. Middle Butts: 3'-2", centerline from finish floor.
3. Bottom Butts: 5 inches; finish floor to bottom of butt.
4. Locks: centerline from finish floor per hardware schedule.
5. Knobs: 3'-2", centerline from finish floor.
6. Pulls: centerline from finish floor per hardware schedule.
7. Pushes: centerline from finish floor per hardware schedule.

SECTION 08800 - GLAZING

1.1 General: Provide glass and glazing as shown and specified.

A. Standards: Materials and installation shall conform to the following:
1. CPSC 16 CFR Part 1201 (1-91)"Safety Standard for Architectural Glazing Materials."
2. GANA "Glazing Manual - 1990."

B. Quality Assurance:
1. Codes and standards: Provide type of glass and glazing products that comply with ANSI Z97.1 and testing requirements of 16 CFR Part 1201 for category II materials. Comply with all applicable codes, standards and regulations that control safety glazing materials and installation.
2. System Performance: Provide glass and glazing that has been produced, fabricated and installed to withstand normal thermal movement, wind loading and, where applicable, impact loading, without failure including loss or breakage of glass, failure of glazing sealants or gaskets to remain watertight and airtight, deterioration of glass and glazing materials and other defects in the work.
3. Installation: Performed only by experienced glaziers.

C. Warranty:
1. Insulating glass: Five years from date of installation against defects that materially obstruct vision through the glass or affect thermal and physical integrity.

2.1 Materials:

A. Glass:
1. Float Glass (FG): 1/4" thick clear float glass.
2. Tempered Glass (TG): 1/4" and 1/2" thick clear, tempered safety glass, free-of-tong marks.
3. Insulating Glass (IGL): 1" thick clear, low-e tempered sealed glass; 1/4" thick interior and exterior glass lites with 1/2" aluminum desiccated dual sealed air space; with the following characteristics:
a. Low-emissivity coating on #2 surface.
b. Visible Light Transmittance: 64% - 70%
c. Visible Light Reflectance - Outdoors: 9%-11%
d. Solar Energy Transmittance: 32%-34%
e. Solar Energy Reflactance-Outdoors: 30%-34%
f. U-Value - Winter Night: 0.29
g. U-value - Summer days: 0.28
h. Solar Heat gain Coefficient: 0.25-0.39
i. Shading Coefficient: 0.43-0.45
j. Manufacturers/Products:
i. AGC/Comfort Ti-AC40, or similar to meet code
ii. Sun Guard/SN-68, or similar to meet code
iii. PPG/Solarban 60, or similar to meet code
iv. Viracon/VE1-2M, or similar to meet code
4. Spandrel Glass (SG) 1/4" thick, Spandrel Ceramic Glass, (Color: GrayBlack or as noted on drawings) to be used in an IGL system on Surface 4, U.N.O. by Old Castle Building Envelope (419) 666-2000, Contact: Doug Dewar.
5. Frosted Window Film, 3M Dusted Crystal Translucent Window Film. Apply on the interior side of glazing.

B. Glazing Materials:
1. Glazing Sealants: Provide elastomeric glazing sealants suitable for applications indicated; compatible with one another and with other materials they will contact, complying with ASTM C920.
2. Glazing Tape: Provide preformed, non-staining and non-migrating elastomeric tape, as recommended by tape and glass manufacturers for application indicated, complying with ASTM C 1281.
3. Glazing gaskets: Provide manufacturer's standard snap-on aluminum stops and neoprene, vinyl or EPDM glazing gaskets.
4. Provide setting blocks, spacers and edge blocks of material, size, and shape complying with referenced glazing standard, and compatible with surfaces contacted in installation.

C. Fabrication: Factory fabricate and size all glass.

3.1 Installation

A. Preparation:
1. Field verify measurements and conditions of installation.
2. Examine all details. Provide proper fitting to details indicated.
3. Glazing channel dimensions shown are intended to provide for necessary bite on glass, minimum edge clearance and adequate glazing materials thickness, with reasonable tolerances. Adjust as required by job conditions at time of installation.

B. Install glass and glazing in accordance with the GANA "Glazing Manual" and glass manufacturer's recommendations.
1. Install insulating glass units to comply with recommendations by Sealed Insulating Glass Manufacturers Association (SIGMA).

C. Install setting blocks of proper size at quarter points of sill rabbet. Provide spacers as required.

D. Install glazing sealants, tapes and gaskets in accordance with manufacturer's recommendations. Set glass without springing and install securely to prevent rattling or breakage.

E. Protect glass from breakage during remaining construction. Do not remove non-permanent labels until final acceptance.

DIVISION 9 - FINISHES

SECTION 092423 - PORTLAND CEMENT STUCCO

1.1 General: This section includes materials and installation of exterior stucco wall covering backed with air and water-resistive barrier and drainage mat.

1.2 References:

A. ASTM C926 Standard Specification for Application of Portland Cement-Based Plaster
B. ASTM C1063 Standard Specification for Install of Lathing and Furring for Portland Cement Plaster
C. ASTM C1177 Specification for Glass Mat Gypsum for Use as Sheathing
D. ASTM C1513 Standard Spec for Steel Tapping Screws for Cold-Formed Steel Framing Connections
E. ASTM-E-2430 Standard Specification for Expanded Polystyrene ("EPS") Thermal Insulation Boards For Use in EIFS

1.3 Quality Assurance:

A. Manufacturer Requirements:
1. Stucco and air barrier products manufactured under ISO 9001 Quality System and 14001 Environmental Management System
B. Installer Requirements:
1. Employ skilled mechanics who are experienced and knowledgeable in portland cement stucco application, and familiar with the requirements of the specified work.
C. Warranty:
1. 10 year labor and material

2.1 Materials

A. Manufacturer: STO Corp, P: (800) 221-2397, www.stocorp.com
Strategic Accounts Manager: Ray Redmond, P: (616) 437-2230, rredmond@stocorp.com

B. Stucco and drain screen system: StoPowerwall DrainScreen
1. Air/Moisture Barrier: StoGuard System
a. Sto Gold Fill or rough opening protection, sheathting joints and CMU crack repair.
b. StoGuard Mesh: Coated glass fiber fabric reinforcing mesh
c. StoGuard Fabric: Used with Sto Gold Coat for rough opening protection and joint treatment
d. StoGuard Conformable Membrane: Self-adhered membrane flashing
e. Sto RapidGuard: For rough opening protection, sheathing joints and inside and outside corners
2. Water-Resistive Barrier: Sto Gold Coat
3. Drainage Mat: Sto DrainScreen 6mm
4 Lath: Self-furred galvanized steel diamond mesh metal lath in compliance with ASTM C847
5. Water: Clean, potable and free of foreign matter.
6. Stucco: 102 StoPowerwall Stucco: fiber reinforced one coat portland cement stucco concentrate In compliance with ICC AC 11. Refer to ICC ESR 2323.
7. Finish coating: Sto Essence DPR, integrally colored, factory blended wall finish
a. Medium/Fine Sand Finish

C. Mixing
1. Mix materials in accordance with manufacturer's published instructions.
a. Mix with a clean, rust-free high speed mixer to a uniform consistency.
b. No rapid binder, anti-freeze or accelerator additives permitted.

3.1 Installation

1. Surface Preparation
a. Remove all surface contaminants.
b. Spot surface defects and fill with joint treatment.
c. For CMU application, remove fins and ridges by mechanical means. When excessively rough, skim coat wall with Sto base coat to provide a smooth, level surface.
2. Air and Water-Resistive Barrier Installation
a. Follow manufacturer's instructions, comply with governing regulations and industry standards.
b. Detail transition areas with Sto RapidGuard
c. Provide double-wrap or corner mat reinforcing at all inside and outside corners.
3. Drainage Mat Installation
a. Follow manufacturer's instructions, comply with governing regulations and industry standards.
b. Immediately follow installation of drainage mat with stucco lath.
4. Stucco Installation, refer to Sto Guide Details
a. Install Weep Screed at base of wall.
b. Install casing beads at stucco terminations.
c. Install lath with long dimension at right angles to structural framing. Do not install continuously at joints.
d. Install one piece expansion joints at through wall penetrations, and every 144ft^2.
e. Install corner lath at inside corners and corner bead at outside corners over lath.
f. Install Stucco
i. Scratch Coat, apply with sufficient pressure to embed the metal lath.
ii. Brown Coat. Final thickness of stucco shall be uniform throughout at 7/8 inch.
5. Textured Finish Installation
a. Apply continuously in one operation to the entire wall surface.
b. Work to an architectural break before stopping to avoid cold joints.

SECTION 09260 - WALL SHEATHING SYSTEMS

1.1 General: Provide gypsum board systems as shown and specified.

A. Standards: Materials and installation shall conform to the following:
1. GA 214-90 "Levels of Gypsum Board Finish."
2. GA-216 "Specifications for Application and Finishing of Gypsum Board."
3. USG "SA923 Drywall/Steel Framed Systems."

2.1 Materials:

A. Manufacturer: United States Gypsum Co. (USG), (800) 874-4968, internet www.usg.com.

B. Metal framing: Comply with ASTM C 754 and ASTM C 645 for materials and sizes.
1. Partition metal framing:
a. Studs: Galvanized steel, C-shaped, sizes indicated, 20 gage "ST20"
b. Runners: Match studs, type recommended by stud manufacturer for floor and ceiling support of studs. Provide flexible ceiling runners for full height metal stud framed partitions continuous from floor to underside of structural members or deck above.

C. Ceiling and Soffit metal framing/suspension systems:
1. Small areas: Metal stud framing of appropriate size and gage for spans indicated.
2. Large areas: Furring channel "Grillage" or "Direct Suspension System" designed for concealed support of gypsum board ceilings, of proper type for use indicated.
3. Furring members: 20 gage, galvanized steel screw type, hat-shaped furring.

D. Gypsum board panels: USG "Sheetrock" complying with ASTM C1396, tapered edge face panels, 48" wide, in maximum lengths available to minimize end joint conditions, 5/8" thick.
1. General use panels: Sheetrock Regular panels.
2. Fire rated panels: Sheetrock Firecode Core panels.
3. Water-resistant: panels: Sheetrock HUMITEK panels.

E. Cement board: USG DUROCK Cement Board, 5/8" thick x manufacturer's standard width, complying with ANSI A118.9, and in maximum lengths available to minimize end-to-end butt joints.

F. Fasteners: USG Type "S" bugle head screws for metal framing, USG Type "W" bugle head screws for wood framing, manufacturer's recommended length for panel thickness indicated.

G. Trim: Galvanized steel with knurled and perforated flanges. USG Dur-A-Bead corner bead, No. 200B casing bead metal trim, No. 093 Control Joint.

H. Joint treatment: USG Joint Treatment System, utilizing "Sheetrock Brand Joint Tape", and "Sheetrock Brand Setting-Type (DURABOND)" compound for tape bedding and topping.

I. Adhesives: USG "Sheetrock Brand Setting-Type (DURABOND) 210 or 90" compound for tape bedding and topping.

J. Acoustical sealant: USG Sheetrock Acoustical Sealant, water-base type, gunnable sealant for sealing sound-rated gypsum board systems.

K. Sound attenuation insulation: USG Thermafiber unfaced 3-1/2" thick, mineral fiber insulating batts/blankets; standard lengths and widths required to coordinate with spaces insulated.

3.1 Installation

A. Install metal wall and partition framing and ceiling suspension/ support systems in accordance with USG Bulletin SA 923 and complying with ASTM C754.
1. Ceiling suspension/ support systems: Metal furring system/direct suspension or steel stud framing system.
2. Wall and partition framing:
a. Install steel studs per schedule or at spacing indicated with bottom and top runner tracks anchored to substrates. Provide flexible ceiling runner tracks at full height partitions.
b. Terminate partition stud system 4" above ceilings, except where indicated to be extended to structural support or roof deck above. Brace tops of partition framing to structure or roof deck at maximum 4'-0" on center spacing.
c. Frame openings more than 2'-0" wide with two 20 gage studs at each jamb.
d. Coordinate the installation of supplementary blocking and nailers, provided under Section 06100 work, to support shelving, millwork, toilet accessories, and similar work that cannot be adequately supported by gypsum board alone.

B. Application and Finishing: Install and finish gypsum board to comply with ASTM C 840 and Gypsum Association GA 216 "Recommended Specifications for the Application and Finishing of Gypsum Board."
1. Screw fasten all gypsum board panels.
2. Metal Trim: Install metal corner beads at external corners of gypsum board work and metal trim wherever edge of gypsum board would be exposed. Use longest practical lengths.
3. Control Joints: Locate and install control joints in accordance with USG Bulletin SA923 "Good Design Practice" recommendations.

C. Acoustical Treatment:
1. Where sound-attenuation insulation is indicated, seal gypsum board construction at perimeters, control joints, junction boxes, openings and penetrations with a continuous bead of acoustical sealant including a bead at both faces of partitions.
2. Install sound attenuation insulation at scheduled partitions and ceilings. Install insulation in single layer of required thickness. Extend full thickness over entire area to be insulated. Cut and fit tight around obstructions. Fill all voids.
3. At openings and cutouts, fill open spaces between edges of gypsum board and fixtures, cabinets, ducts, and other flush or penetrating items, with continuous bead of acoustical sealant.
4. Seal sides and backs of electrical boxes to completely close up openings and joints with a bead of acoustical treatment.

D. Finishing:
1. Comply with manufacturer's instructions for mixing, handling, and application of materials. Apply treatment at joints both directions, at flanges of trim accessories, penetrations of gypsum board (electrical boxes, piping, and similar work), fastener heads, surface defects, and elsewhere as indicated. Apply in manner that will result in each of these items being concealed when applied decoration has been completed.
2. Apply joint tape at joints between gypsum boards, except where trim accessories are indicated.
3. Interior Exposed Gypsum Board Finish: Level 5 Finish.
a. Locations: Typical for all walls and ceilings, unless otherwise indicated
b. Finish interior gypsum board by applying the following joint compounds in four coats (not including prefill of openings in base), and sand between coats and after last coat:
c. Embedding and First Coat: Setting-type joint or taping compound.
d. Fill (Second) Coat: Setting-type topping compound.
e. Fill (Third) Coat: Setting-type topping compound.
f. Finish (Fourth) Coat: Skim coat entire surface.

4. Interior Concealed Gypsum Board: Level 3 Partial Finishing.
a. Finish concealed gypsum board construction that requires finishing same as exposed gypsum board construction, except the third coat and sanding can be omitted.

E. Cement Board: Install cement board as a 16" high base at all kitchen and kitchen cook line wall types as indicated on drawings.

SECTION 092816 - GLASS-MATT FACED GYPSUM BACKING BOARDS

NOT USED

1.1 General: Provide Fiberglass-mat faced, moisture resistant gypsum backer board as shown and specified.

A. Standards: Materials and installation shall conform to the following:
1. ASTM C840 Standard Specification for Application and Finishing of Gypsum Board.
2. ASTM C1002 Standard Specification for Steel Self Piercing Tapping Screws for the Application of Gypsum Panel Products or Metal Plaster Bases to Wood Studs or Steel Studs
3. ASTM C1178 Standard Specification for Glass Mat Water-Resistant Gypsum Backing Panel
4. ASTM D3273 Standard Test Method for Resistance to Growth of Mold on the Surface of Interior Coatings in an Environmental Chamber
5. ASTM D6329 Standard Guide for Developing Methodology for Evaluating the Ability of Indoor Materials to Support Microbial Growth Using Static Environmental Chambers.
6. ASTM E96 Standard Test Methods for Water Vapor Transmision of Materials
7. Tile Council of North America, Inc. (TCNA): TCA Handbook for Ceramic Tile Installation, Current Edition.

2.1 Materials:

A. Manufacturer: Georgia-Pacific Gypsum LLC, (800) 225-6119, internet: www.buildgp.com

B. Fiberglass-Mat Faced Gypsum Backing Board: DensShield Fireguard Tile Backing Board complying with ASTM C1178, Type X, Square edges, 4' wide in maximum lengths available to minimize end joint conditions, 5/8" thick. Surfacing: Coated fiberglass mat on face, back and long edges.
1. General use panels: 5/8" DensShield Fireguard Tile Backer, Georgia-Pacific Gypsum.

C. Fasteners: Screws meeting ASTM C1002, with corrosion resistant treatment. Size and type per manufactuer's recommendations:
1. Walls (Steel Frame): Bungle head, fine thread, sharp point rust resistant drywall screw
2. Walls (Walls Frame): Bungle head, coarse thread, sharp point rust resistant screw

D. Metal Framing, Trim, joint treatment, adhesives, acoustical sealant, and sound attenuation insulation: Refer to Section 09260 Gypsum Board Systems

3.1 Installation

A. Install DenShield at all tile walls excluding hood area as indicated on drawings.

B. General: Install in accordance with ASTM C840, manufacturer's recommendations and TCA Handbook for Ceramic Tile Installation.
1. Manufacturers Recommendations: refer to Current "Product Catalog", Georgia Pacific Gypsum.
a. Attach DensShield Tile Backer with grey side facing the interior. Tile should be applied on the grey coated side of DensShield Tile Backer. Cut panel to required size and make cutouts. Fit ends and dges closely. Do not leave gaps between panels.
b. DensShield Tile Backer may be cut by using a utility knife to score, then snap, working from the grey face side.
c. For walls, when used as a tile substrate a minimum 20-gauge steel or wood framing should be spaced no greater than 24" o.c. for 5/8" DensShield Tile Backer. Board can be applied horizontally or vertically.
d. Fasteners shall be spaced 6" o.c. for walls for wood and steel framing. Do not countersink. Drive fasteners flush with grey coated surface. See manufacturer installation Fastener Guide for proper selection.
e. In all corners, imbed with a bead of flexible sealant when installing panels into corner. Apply self-adhesive 2" wide fiberglass mesh tape and bed tape on all joints and corners with material used to set tiles.
f. Caulk or seal fixture/plumbing penetrations and abutments to dissimilar materials.
g. Do not use all purpose joint compound or tape in wet areas.
h. Do not apply DensShield Tile Backer directly to concrete or masonry block. Framing or furring of the walls is necessary.
i. DensShield Tile Backer should not be used for exterior installations.
j. DensShield Tile Backer panels should not be used as a base for nailing and mechanical fastening.
k. DensShield Tile Backer has a built in moisture barrier. Never install vapor retarders directly behind DensShield Tile Backer panels. In retrofit applications, some paints or other wall coverings may constitute a vapor barrier; remove or effectively penetrate these coverings prior to installing DensShield Tile Backer panels.

C. Refer to Section 09260 Gypsum Board Systems for additional installation and sound treatment instructions

SECTION 09330 - QUARRY TILE

1.1 General: Provide quarry tile flooring and base as shown and specified.

A. Standards: Materials and installation shall conform to the following:
1. ANSI A137.1 "Ceramic Tile."
2. TCA "Handbook for Ceramic Tile Installation."

2.1 Materials:

A. Manufacturers:
1. Quarry Tile: Daltile, (877) 556-5728, internet: http://daltile.com
a. For ordering purposes, email all orders to chipotle@daltile.com
2. Waterproofing, Setting and Grouting Materials and Tile Base Membrane: Mapei
a. For ordering purposes, email all orders to chipotle@daltile.com
b. For technical questions, contact Mapei, (800) 992-6273, internet: www.mapei.com

B. Quarry Tile: Daltile 6" x 6" x 1/2" Quarry Textures with 5" base as scheduled on finish plan and appropriate trim; Color: "Ashen Gray" DT03
1. Entire Kitchen Area: Provide non-abrasive finish quarry tile.
2. Rest Rooms: Provide non-abrasive finish quarry tile.
3. Outside Corner Cove Base (Kitchen): #QC-(L or R)-3565 5" x 6"
4. Inside Corner Cove Base: #QB-3565 1" x 5"
5. Bullnose Coveless Base: #Q-1665, 6" x 6"
6. Bullnose Corner Coveless Base: #QCRL-1665, 6" x 6"

C. Waterproofing for elevated floor slabs: Mapei, Mapelastic AquaDefense, Premium Waterproofing and Crack Isolation Membrane
D. Setting Adhesive: Mapei, Ultraflex 3, Color: Gray
E. Grout: Mapei, Kerapoxy IEG CQ, Color: #9, "Gray", 1/4" grout joints.
F. Quarry Tile Base Membrane: Mapei, Mapelastic AquaDefense, Premium Waterproofing and Crack Isolation Membrane

3.1 Installation

A. Preparation: Clean substrate surfaces, scheduled to receive quarry tile, thoroughly and remove all coatings that may impair bond.
1. Center tile fields both directions in each floor area. Adjust layout to minimize tile cutting. Avoid tile less than one-half size. Locate cuts to be least conspicuous.
2. Maintain units uniformly "in plane." Provide straight, uniform joint widths and grout lines.

B. Elevated Floor Slabs: Install waterproofing membrane at elevated floor slab surfaces scheduled to receive quarry tile floor finish. Install membrane materials in accordance with manufacturer's installation instructions to produce a waterproof membrane of uniform minimum 30 mil thickness bonded securely to substrate.
1. Extend waterproofing up vertical wall surfaces minimum 10" high.
2. Extend membrane down into floor drain flanges to assure continuous waterproofing at drainage points.

C. Wet Areas: Install waterproofing membrane at all quarry tile wall base. Install membrane materials in accordance with manufacturer's installation instructions to produce a waterproof membrane of uniform minimum 30 mil thickness bonded securely to substrate.
1. Extend waterproofing up all vertical wall surfaces receiving quarry tile base minimum 10" high. Extend waterproofing membrane 10" minimum horizontally from all vertical wall surfaces receiving quarry tile base.

D. Installation: Install, grout and clean ceramic tile in accordance with referenced TCA installation details and ANSI standard specifications for setting methods scheduled.
1. Floors: Latex-portland cement mortar on concrete; TCA detail F113 and ANSI A108.5, grout ANSI A108.10.
2. Base: Latex-portland cement mortar on cement board.

SECTION 09340 - CERAMIC AND PORCELAIN TILE

NOT USED

1.1 General: Provide ceramic wall tile as shown and specified.

A. Standards: Materials and installation shall conform to the following:
1. ANSI A137.1 "Ceramic Tile."
2. TCA "Handbook for Ceramic Tile Installation."

1.2 Performance Requirements:

A. Static Coefficient of Friction: Tile on walkway surfaces shall be provided with the following values as determined by testing in conformance with ASTM C1028.
1. Level Floor Surfaces and Step Treads: Minimum of 0.6 (wet)
2. Ramp Surfaces: Minimum of 0.8 (wet)

1.3 Extra Materials:

A. Provide for Owner's use a minimum of 2 percent of the primary sizes and colors of tile specified, boxed and clearly labeled.

2.1 Materials:

A. Manufacturers:
1. Floor Tile and Glazed Wall Tile:
Daltile, P: (877) 556-5728, internet: http://daltile.com
a. For ordering purposes, email all orders to chipotle@daltile.com
2. Fluted Wall Tile:
Brick City Tile, P: (973) 589-2080, internet: http://brickcitytile.com
a. For ordering purposes, email all order to hello@brickcitytile.com
3. Waterproofing, Setting and Grouting Materials and Tile Base Membrane: Mapei
a. For ordering purposes, email all orders to chipotle@daltile.com
b. For technical questions, contact Mapei, (800) 992-6273, internet: www.mapei.com

B. Tile Products:
1. Glazed Wall Tile:
a. Kitchen Tile and as noted on A120, Series - Finish Line Glazed Ceramic Tile:
i. Color - White FL90, Semi-Gloss, Size - 4 x 16, Pattern - Stacked Bond
2. Fluted Wall Tile:
a. Brick City Tile, Series - Homey Stripes:
i. Color - Gray Matte PIESTGRM, Size - 12x24, Pattern - Horizontal Stacked
Wainscot Tile and as noted on A120.
ii. Color - Clay Matte PIESTCLM, Size - 12x24, Pattern - Horizontal Stacked
3. Floor Tile:
a. Porcelain Tile - Queue as noted on A120, Series - Museo (Also base and wet wall, see A120)
i. Color - Natural Grey MU32, Size - 24x48, Pattern - Stacked
b. Porcelain Tile - Seating Area as noted on A120
i. Series - Vicinity Glazed Porcelain Tile
Color - Honey VC03, Size - 6x36, Pattern - Herringbone
4. Non-Ceramic Trim as indicated on drawings.

C. Setting Adhesive:
Ultraflex LFT Mapei, Large-and-Heavy-Tile and Thin Set Mortar with Polymer, Color - Gray

D. Grout:
1. Glazed Wall Tile:
a. Mapei, Series - Flexcolor CQ - Gray #5009, 1/8" grout joints.
3. Fluted Wall Tile
a. Gray Matte Tile: Mapei, Series - Flexcolor CQ - Iron #5107, 1/8" grout joints
b. Clay Matte Tile: Mapei, Series - Flexcolor CQ - Wicker #5224, 1/8" grout joints
4. Porcelain Floor Tile
a. Mapei, Series - Flexcolor CQ - Chocolate #5007 , 1/8" grout joints

E. Waterproofing for floor tile as noted: Mapei, Mapelastic AquaDefense, Premium Waterproofing and Crack Isolation Membrane
a. Tile Base Membrane: Mapei, Mapelastic AquaDefense, Premium Waterproofing and Crack Isolation Membrane

3.1 Installation

A. Preparation: Clean substrate surfaces scheduled to receive ceramic tile thoroughly and remove all coatings that may impair bond.
1. Protect surrounding work from damage.
2. Remove any curing compounds or other contaminates.
3. Vacuum clean surfaces and damp clean.
4. Install cementitious backer board as indicated in drawings in accordance with ANSI A108.11 and board manufacturer's instructions. Tape joints and corners, cover with skim coat of dry-set mortar to a feather edge.
5. Prepare substrate surfaces for adhesive installation in accordance with adhesive manufacturer's instructions.
6. For Floor Tile, seal substrate surface cracks with fillers. Level existing substrate surfaces to acceptable flatness tolerances.

B. Installation - General:
1. Install, grout and clean ceramic tile in accordance with referenced TCA installation details and ANSI standard specifications for setting methods scheduled.
2. Lay tile in pattern indicated, following detail drawings for layout considerations.
a. Arrange pattern so that a full tile or joint is centered on each wall and that no tile less than 1/2 width is used. Do not interrupt tile pattern through openings. Adjust layout to minimize tile cutting. Locate cuts to be least conspicuous.
b. Horizontal rows of tile shall be full-height courses, unless noted otherwise.
3. Use specified stainless steel corner guards at tile-to-tile and tile-to-FRP outside corners.
4. Use corner bead of 100% silicone sealant, color to match grout, at inside corners where tile meets tile.
5. Use corner bead of 100% silicone sealant, white, at inside corners where tile meets paint gyp. board, tile meets FRP or tile meets aluminum.
6. Cut and fit tile to penetrations through tile, leaving sealant joint space. Place tile joints uniform in width, subject to variance in tolerance allowed in tile size. Make joints watertight, without voids, cracks, escess mortar, or excess grout.
7. Sound tile after setting. Replace hollow sounding units.
8. Keep expansion joints free of adhesive or grout. Allow tile to set for a minimum of 48 hours prior to grouting. Apply sealant to junction of tile and dissimilar materials and junction of dissimilar planes. Refer to section 07900 Joint Sealers.
9. Clean tile and grout surfaces.

Consultant:
R/A
Red Architecture
589 W. NATIONWIDE BLVD. SUITE B
COLUMBUS, OHIO 43215 (614) 487-8770

BID DOCUMENTS
ONLY NOT FOR
CONSTRUCTION

COPYRIGHT 2026
ALL DRAWINGS AND SPECIFICATIONS SHALL REMAIN THE PROPERTY OF RED ARCHITECTURE LLC AND MAY NOT BE USED, DUPLICATED, OR ALTERED WITHOUT WRITTEN CONSENT OF THE ARCHITECT.

ECP PARTNERS

CMG HIGHLAND CITY SHELL, FL
TBD US 98
LAKELAND, FL 33812

Issue Record:

02/25/26	PERMIT SET
02/25/26	BID SET

Revisions:

Drawn: JLH,PH
Checked: DM,DF

Project No. EPL002

Contents:

ARCHITECTURAL SPECIFICATIONS

G015

Exterior Patio Railing:

Preparation: Remove all visible oil, grease, soil, loose paint, rust and all other soluble contaminates from steel surface. Remove all dust before solvent cleaning SSPC-SP1 by the use of stiff bristle brush. SSPC-SP3 may be required as a more aggressive preparation to remove loose mill scale, loose rust, loose paint and other loose detrimental foreign matter from the surface. Performance is better with more aggressive preparation.
Prime: (1) coat PPG; 95-3300 Durathane DTM Urethane Mastic (250 g/L VOC): Applied at a dry film thickness of not less than 3.0 to 5.0 mils.
Finish: (1) coat PPG; 95-3300 Durathane DTM Urethane Mastic (250 g/L VOC): Applied at a dry film thickness of not less than 3.0 to 5.0 mils.
Application: Conventional or HVLP (high volume low pressure) be done with conventional spray or airless equipment or brush or roller.

Exterior Prefinished Metal Wall Panels:

Preparation: Before applying primer or other surface treatments, clean galvanized metal surface to SSPC-SP1 that could impair bond of the various coatings. Remove oil, grease and soap film before priming use of Krud Kutter Metal Clean & Etch may be required on bare or new galvanized. Surface must be clean, dry and free of contaminants, including salt deposits. Additional prep may be needed to SSPC-SP2. Schedule cleaning and painting so dust and other contaminants from the cleaning process will not fall on wet, newly painted surfaces.

Note: Some selected areas of bare concrete surfaces will require (1) coat of Perma Crete 4-603XI Alkali Resistant Concrete Primer before steel installation over all concrete surfaces.

Owner Option 1:
Prime: (1) coat XIM Primer Bond - Applied at a dry film thickness of not less than 1.5 to 2.0 mils.
Finish: (2) coats PPG; 90-1110 Series Pitt-Tech Satin DTM Industrial Enamels (90 g/L VOC): Applied at a dry film thickness of not less than 2.0 to 4.0 mils.

Owner Option 2:
Prime: (1) coat PPG; 97-245 Pitt-Guard DTR Epoxy Mastic Primer (263 g/L VOC): Applied at a dry film thickness of not less than 4.0 to 7.0 mils.
Finish: (2) coats PPG; 95-3300 Durathane Urethane Mastic (240 g/L VOC): Applied at a dry film thickness of not less than 2.0 to 4.0 mils.

Owner Option 3 (Low VOC):
Prime: (1) coat PPG; Amerlock 2 Fast Dry VOC Compliant Epoxy (84 g/L VOC): Applied at a dry film thickness of not less than 4.0 to 6.0 mils.
Finish: (2) coats PPG; Amershield VOC Aliphatic Urethane (84 g/L VOC): Applied at a dry film thickness of not less than 5.0 to 8.0 mils.

Application: Conventional or HVLP (high volume low pressure) be done with conventional spray or airless equipment or brush or roller.

Exterior Galvanized Metal:

Preparation: Before applying primer or other surface treatments, clean galvanized metal surface to SSPC-SP1 that could impair bond of the various coatings. Remove oil, grease and soap film before priming use of Krud Kutter Metal Clean & Etch may be required on bare or new galvanized. Surface must be clean, dry and free of contaminants, including salt deposits. Additional prep may be needed to SSPC-SP2. Schedule cleaning and painting so dust and other contaminants from the cleaning process will not fall on wet, newly painted surfaces.

Note: Some selected areas of bare concrete surfaces will require (1) coat of Perma Crete 4-503 Concrete Primer before steel installation over all concrete surfaces.

Owner Option 1:
Prime: (1) coat PPG; 6-209 SpeedHide Galvanized Metal Primer (400 g/L VOC): Applied at a dry film thickness of not less than 3.0 to 5.0 mils.
Finish: (2) coats PPG; 4216 Plus HP Series Pitt-Tech Plus Semi-Gloss DTM Industrial Enamels (90 g/L VOC): Applied at a dry film thickness of not less than 2.0 to 4.0 mils.

Owner Option 2:
Prime: (1) coat PPG; 97-245 Pitt-Guard DTR Epoxy Mastic Primer (263 g/L VOC): Applied at a dry film thickness of not less than 4.0 to 7.0 mils.
Finish: (2) coats PPG; 95-3300 Durathane Urethane Mastic (240 g/L VOC): Applied at a dry film thickness of not less than 2.0 to 4.0 mils.

Owner Option 3 (Low VOC):
Prime: (1) coat PPG; Amerlock 2 Fast Dry VOC Compliant Epoxy (84 g/L VOC): Applied at a dry film thickness of not less than 4.0 to 6.0 mils.
Finish: (2) coats PPG; Amershield VOC Aliphatic Urethane (84 g/L VOC): Applied at a dry film thickness of not less than 5.0 to 8.0 mils.

Application: Conventional or HVLP (high volume low pressure) be done with conventional spray or airless equipment or brush or roller.

Exterior CMU Primer:

CMU Preparation: Mortar should cure for at least 30 days and preferably 90 days prior to priming. Fill block with an appropriate block filler. Surfaces previously coated with water thinned cement-based paint must be prepared with extra care. If the material appears to be adhering tightly, a masonry sealer may be applied to seal the surface. Check adhesion by applying a piece of masking tape. If the sealer peels off and has loose particles, remove all chalking or crumbling material, re-seal and re-check adhesion.

Field Preparation: Surfaces to be coated must be dry, clean, sound, and free from all contamination including loose and peeling paint, dirt, grease, oil, wax, concrete curing agents and bond breakers, chalk, efflorescence, mildew, rust, product fines, and dust. Remove loose paint, chalk, and efflorescence by wire brushing, scraping, sanding, and/or pressure washing. Putty all nail holes and caulk all cracks and open seams. Sand all glossy, rough, and patched surfaces. Feather back all rough edges to sound surface by sanding.

Prime: (2) Coats PPG; Speedhide Interior/Exterior Masonry Hi Fill Latex Block Filler

Application: Brush, Roll or Spray

Exterior Stucco/EIFS Surfaces (including wet areas):

Preparation: Remove all visible oil, grease, soil and all other foreign substances with cleaning solutions and/or scrapers. Allow to dry and sand all areas that need smoothing and dust off.
Prime: (1) coat PPG; 4-603 Perma-Crete Alkali Resistant Primer (100 g/L VOC): Applied at a dry film thickness of not less than 1.2 to 1.9 mils.
Finish: (2) coats PPG; 4-22 Perma-Crete Hi-Build Acrylic (100 g/L VOC): Applied at a dry film thickness of not less than 3.2 to 5.8 mils.
Application: Airless spray with back roll using 3/4" nap roller.

Exterior Wood:

Preparation: Remove all visible oil, grease, soil and all other foreign substances with cleaning solutions and or scrapers. Allow to dry and sand all areas that need smoothing and dust off.
Prime: (1) coat PPG; 17-921 Seal Grip Primer Sealer (100 g/L VOC): Applied at a dry film thickness of not less than 2.0 to 4.0 mils.
Finish: (2) coats PPG; 70-501 Manor Hall Exterior Semi-Gloss or PPG Acri-Shield Semi-Gloss PP649 (50 g/L VOC): Applied at a dry film thickness of not less than 1.5 to 3.0 mils.
Application: Brush, Roll or Spray

D. Interior Coatings:

Interior Metals: (Doors, door frames, where indicated)
Preparation: Remove all visible rust, oil, grease, soil and all other foreign substances with cleaning solutions and/or scrapers. Allow to dry and sand all areas that need smoothing and dust off.
Prime: (1) coat PPG; 4020PF Series Pitt-Tech Plus Int/Ext DTM Acrylic Industrial Primer (90 g/L VOC): Applied at a dry film thickness of not less than 2.0 to 4.0 mils. (Repaints only require spot prime on bare metal surfaces.)
Finish: (2) coats PPG; V-50-410 Breakthrough Semi-gloss Sheen Acrylic (250 g/L VOC): Applied at a dry film thickness of not less than 1.4 to 2.0 mils.
Application: Conventional spray, HVLP or Airless spray. Touch-ups shall be done with conventional spray or airless equipment or brush or roller.

Interior Metals: (Metal Deck if indicated on Finish Plan)
Preparation: Remove all visible rust, oil, grease, soil and all other foreign substances with cleaning solutions and allow to dry before priming.
Prime: (1) coat PPG; 4020PF Series Pitt-Tech Plus Int/Ext DTM Acrylic Industrial Primer (90 g/L VOC): Applied at a dry film thickness of not less than 2.0 to 4.0 mils. (Primer only required on unpainted decking or to spot prime bare areas in decking.)
Finish: (2) coats PPG; 90-1110 Pitt-Tech Plus Satin Acrylic (100 g/L VOC): Applied at a dry film thickness of not less than 2.0 to 4.0 mils.
Application: Conventional spray, HVLP or Airless spray. Touch-ups shall be done with conventional spray or airless equipment or brush or roller.

Interior Gyp. Bd.:
Preparation: Remove all visible oil, grease, soil and all other foreign substances with cleaning solutions. Fill hairline cracks, holes and other defects with filler compatible with finish coats. Sand smooth all areas filled and/or areas to make a smooth overall finish.
Prime: (1) coat PPG; 9-900 Pure Performance Acrylic Primer (0 g/L VOC): Applied at a dry film thickness of not less than 1.4 to 2.0 mils. (Spot prime required only on repaint projects.)
Finish: (2) coats PPG; Pure Performance Zero VOC Eggshell 9-500 Series, sheen as shown on finish plan: Applied at a dry film thickness of not less than 1.5 to 2.0 mils.
Application: Conventional spray, HVLP or Airless spray. Touch-ups shall be done with conventional spray or airless equipment or brush or roller.

Interior Wood Trim and Plywood - Clear Polyurethane Finish:
(Plywood finishes shall be shop applied in a controlled environment)

Shop Preparation: Scuff sand between coats.

Shop Finish: (2) coat, ML Campbell Krystal conversion varnish, Clear Dull Sheen
Application: Spray

Field Preparation: All cuts in field are to be sanded smooth. Scuff sand between coats.

Field Finish: (2) coat, ML Campbell High Performance Pre-Cat Lacquer, Clear Dull Sheen
Application: Wipe on with t-shirt rag.

Exterior Traffic Safety Marking.:
Preparation: All surfaces must be clean, dry and free from oil, grease, antifreeze, loose sand, aggregate and chipping/peeling existing striping. Any curing compounds used on new concrete must be mechanically abraded off prior to striping. When striping on freshly sealed surfaces use caution as some sealers can affect the curing and adhesion of traffic paint. When in doubt, always test adhesion.

For complete drying and minimum dirt retention when striping parking lots, the lots should be closed to traffic for two hours minimum after painting. New asphalt and concrete should be allowed to cure for a minimum of 14 days to maximize adhesion and durability.
Owner Option 1:
Finish: (1) coat PPG; A-2886B Type II, White Zone Marking - Applied at a dry film thickness of not less than 8.6 mils.

Owner Option 2:
Finish: (1) coat PPG; A-2886B Type II, Yellow Zone Marking - Applied at a dry film thickness of not less than 8.6 mils

Application: Applying a test strip to determine dry to no- pickup time when the humidity is higher than 65%. Cone whenever necessary.
• Do not heat paint in striping system above 60 C.
• Do not apply when temperatures are below 3 C.
• Do not apply when rain is forecast.
• Do not apply when temperatures are near or below the dew point or rain is forecast within 1 hour.
• Do not thin more than 5% with acetone and then use immediately.
• Do not apply if temperature is expected to fall below freezing for 6 hours after application of paint.
Application Equipment: Apply with a high quality brush, roller, or by airless spray equipment.

Airless Spray: Pressure 2000 psi, tip 0.015" - 0.021"Spray equipment must be handled with due care and in accordance with manufacturer's recommendation. High-pressure injection of coating s into the skin by airless equipment may cause serious injury.
Brush: Polyester/Nylon Brush
Roller: All-purpose nap roller cover.

E. Color Guide: Refer to Finish Plan and drawings for exact location of all colors.

WHERE	WHAT	COLOR	SHEEN
Exterior Traffic Safety Marking	PPG A-2886B Type II, Low VOC Fast Dry Solvent	PPG White Zone Marking	Satin
Exterior Traffic Safety Marking	PPG A-2886B Type II, Low VOC Fast Dry Solvent	PPG Yellow Zone Marking	Satin
Exterior Galvanized Metal, Flashing and Prefinished Metal Wall Panels	PPG Pitt-Tech Plus EP 90-1170 DTM Series	PPG 1001-7 "Black Magic"	Satin
Exterior (Roof Mounted) Gas Piping	PPG Pitt-Tech Plus EP 90-1610 DTM Series	Yellow	Semi-Gloss
Exterior and Interior Gas Piping, Where Exposed	PPG Pitt-Tech Plus EP 90-1610 DTM Series	Match surrounding finishes/verify with architect	Semi-Gloss
Exterior CMU Primer	PPG Speedhide Interior/Exterior Masonry Hi Fill Latex Block Filler	White	Flat
Exterior CMU	PPG Pitt-Tech Plus EP 90-1610 DTM Series	PPG 1001-6 "Knight's Armor"	Semi-Gloss
Exterior CMU	PPG Pitt-Tech Plus EP 90-1610 DTM Series	PPG 1001-7 "Black Magic"	Semi-Gloss
Exterior Ferrous Metals	PPG Pitt-Tech Plus EP 90-1610 DTM Series	PPG 1001-7 "Black Magic"	Semi-Gloss
Exterior Wood	PPG Permanizer 749-10 Series or PPG Acri-Shield PP649 Series	PPG 1001-7 "Black Magic"	Semi-Gloss
Exterior Stucco and EIFS	PPG Perma-Crete 4-22 Series High Build Acrylic Topcoat	PPG 1010-1 "Pegasus"	Flat
Exterior Stucco and EIFS	PPG Perma-Crete 4-22 Series High Build Acrylic Topcoat	PPG 1001-7 "Black Magic"	Flat
Exterior Stucco and EIFS	PPG Perma-Crete 4-22 Series High Build Acrylic Topcoat	PPG 1001-6 "Knight's Armor"	Flat
Exterior Stucco and EIFS	PPG Perma-Crete 4-22 Series High Build Acrylic Topcoat	PPG 1058-7 "Autumn Ridge"	Flat
Interior Doors, Door Frames, Rails and Rail Frames, Where Specified	PPG Breakthrough V62-510 Series	PPG 1001-7 "Black Magic"	Semi-Gloss
Interior Ferrous Metals, Where Specified	PPG Pitt-Tech Plus EP 90-1170 DTM Series	PPG 1010-1 "Pegasus"	Semi-Gloss
Dining Room and Passage Gyp. Bd.	PPG Pure Performance Zero VOC 9-310 Series	PPG 1010-1 "Pegasus"	Eggshell
Dining Room and Passage Gyp. Bd. Ceiling	PPG Pure Performance Zero VOC 9-100 Series or PPG Speedhide 6-4110XI	PPG 1010-1 "Pegasus"	Flat
Restroom, Cooking, Kitchen and Serving Area Soffit Gyp. Bd. Ceilings	PPG Pure Performance Zero VOC 9-500 Series	PPG 1041-1 "Moonlit Snow"	Eggshell
Interior Metal Columns	PPG Pitt-Tech Plus EP 90-1170 DTM Series	PPG 1001-7 "Black Magic"	Satin
Interior Metal Roof Deck	PPG Pitt-Tech Plus EP 90-1170 DTM Series	PPG 1010-1 "Pegasus"	Satin
Interior Metal Roof Deck (ALT)	PPG Pitt-Tech Plus EP 90-1170 DTM Series	PPG 1013-5 "Victorian Pewter"	Satin
Patio Railing	PPG Durethane DTM Urethane 95-3300 Series	PPG 1001-7 "Black Magic"	Gloss

3.1 Installation:

A. Examination:
1. Verify that site environmental conditions are appropriate for application of coatings specified.
2. Immediately prior to coating application, ensure that surfaces to receive coatings are dry.
3. Ensure that moisture-retaining substrates to receive coatings have moisture content within tolerances allowed by coating manufacturer, using moisture measurement techniques recommended by coating manufacturer.
4. Immediately prior to coating application, examine surfaces to receive coatings for surface imperfections and for contaminants which could impair performance or appearance of coatings, including but not limited to, loose primer, rust, scale, oil, grease, mildew, algae, or fungus, stains or marks, cracks, indentations, or abrasions.
5. Correct the above conditions and any other conditions which could impair performance or appearance of coatings in accordance with specified surface preparation procedures before proceeding with coating application.

B. Preparation:
1. Do not start work until surfaces to be finished are in proper condition to produce finished surfaces of uniform, satisfactory appearance.
2. Stains and Marks: Remove completely, if possible, using materials and methods recommended by coating manufacturer; seal with shellac or other coating acceptable to paint manufacturer stains and marks that might bleed through paint finishes which cannot be completely removed.
3. Remove or protect hardware, electrical plates, mechanical grilles and louvers, lighting fixture trim, and other items not indicated to receive coatings which are adjacent to surfaces to receive coatings.
4. Remove mildew from impervious surfaces by scrubbing with solution of disodium phosphate and bleach. Rinse with clean water and allow substrate to thoroughly dry.
5. For specific substrate preparation, see individual specifications.
6. Provide necessary staging, ladders, shield, protective coverings and drop cloths. Protect floors, walls and adjacent work and materials. Remove and properly replace temporary protection and coverings removed from any part of the work or finish. Repair damage at Contractor's expense.

C. Application:
1. General: Mix, prepare and apply paint according to manufacturer's written instructions.
   a. Use applicators and techniques best suited for substrate and type of material being applied.
   b. Do not apply high-performance coatings over dirt, rust, scale, grease, moisture, scuffed surfaces, or conditions detrimental to forming a durable coating film.
   c. Coating surface treatments, and finishes are indicated in the coating system descriptions.
   d. Provide finish coats compatible with primers used.
   e. The term "exposed surfaces" includes areas visible when permanent or built-in fixtures, convector covers, grilles, covers for finned-tube radiation, and similar components are in place. Extend coatings in these areas, as required, to maintain system integrity and provide desired protection.
2. Application Procedures: Apply coatings by brush, roller, spray, or other applicators according to manufacturer's written instructions.
   a. The number of coats and film thickness required is the same regardless of application method.
   b. Completed Work: Match approved Samples for color, texture, and coverage. Remove, refinish, or recoat work that does not comply with specified requirements as directed by Tenant. Paints and coatings work is subject to acceptance by the Tenant.
   c. Keep brushes and rollers clean, free from contamination and suitable for the finish required.
   d. Unless otherwise indicated, allow exterior paints to dry for 48 hours and interior paints to dry for 24 hours between coats.
   e. Sand lightly and remove dust between coats to achieve required finish.
   f. Finished surfaces shall be uniform in finish and color and free of brush marks, sagging, holidays, corduroy and other imperfections. Coverage and hide shall be complete.
   g. Edges of paint or finish adjoining other materials or colors shall be sharp and clean without overlapping. Cut paint in neatly around glass or other edges.
   h. Paints and coatings work is subject to acceptance by the Tenant. Correct unsatisfactory work not complying with these specifications as directed by the Tenant.

D. Cleaning:
1. After completing painting, clean glass and paint spattered surfaces. Remove spattered paint by washing and scraping without scratching or damaging adjacent finished surfaces.

E. Protection:
1. Protect work of other trades, whether being painted or not, against damage from painting. Correct damage by cleaning, repairing or replacing, and repainting, as approved by Architect / Tenant.
2. Provide "Wet Paint" signs to protect newly painted finishes. After completing painting operations, remove temporary protective wrappings provided by others to protect their work.
3. After work of other trades is complete, touch up and restore damaged or defaced painted surfaces.

F. Maintenance: Furnish extra paint materials from the same production run as the materials applied in the quantities described below. Package paint materials in unopened, factory-sealed containers for storage and identify with labels describing contents. Deliver extra materials to the Tenant.
1. Provide one gallon of paint and wood stain of each type and color required for maintenance purposes. Provide original, unopened, labeled containers with color samples and a list of project use.

DIVISION 10 - SPECIALTIES

SECTION 10522 - PORTABLE FIRE EXTINGUISHES

1.1 General: Provide portable fire extinguishers as shown and specified.

A. Standards: Materials and installation shall conform to the following:
1. NFPA 10 "Standard for Portable Fire Extinguishers.

2.1 Materials:

A. Provide minimum 10 lb. capacity fire extinguishers in quantity and type complying with local code and fire regulations requirements.
1. Provide new fire extinguishers fully loaded, tested, UL and FM labeled and listed and ready for use.
2. Provide manufacturer's recommended mounting brackets and hardware.

3.1 Installation:

A. Install fire extinguishers in accordance with manufacturer's installation instructions, at heights and locations acceptable to the local fire regulations enforcement authority

SECTION 10700 - EXTRUDED ALUMINUM CANOPY

1.1 General: Provide canopies as shown and specified.

A. Standards: Materials and installation shall conform to the following:
1. AWS, D1.1 - Structural Welding Code - Steel
2. AMMA, Aluminum Finishes AAMA 2604 (FGIA 2604) - Powder Coat

B. Quality Assurance
1. Shop Drawings: To be created under the guidance of a professional engineer. Site Specific stamped drawing may be required by the manufacturer based on location. Drawings must indicate size, material and finish. Include plan, elevations and sections to clearly outline the canopy locations. Include installation procedures, details of joints, attachments and clearances.
   a. Submit within 15 days after contract award.
2. Color charts showing manufacturer's full range of colors from standard line including Chipotle's custom "charcoal" color match to prototypical window mullion system.

2.1 Manufacturers:

A. Architectural Fabrication, Inc. – Manufacturer is located at 2100 E. Richmond Avenue, Fort Worth, TX 76104. P: (800) 962-8027. E: chipotle@arch-fab.com, W: www.arch-fab.com
B. Substitutions are acceptable assuming they comply with this specification, are submitted based on Quality Assurance and Division1 - Section 01100 requirements and have minimum 10 years experience, and only when approved by Arch PM and Tenant DM.
1. Awnex, Contact: Katie Dicks, P: 770-704-7140 x151, E: katie@awnexinc.com
2. Uni-Structures, Contact: Dana Fredericks, P: 678-974-1773
3. API, Contact: Jade Moore-Esposito, P: 813-925-0144, E: jesposito@americanproducts.com

2.2 Materials:

A. Specifications are based on Architectural Fabrication, Inc. - Helios Canopy Patent #9,976,310
1. Framing: Gutter fascia, tube, angles: 6063-T6 alloy extruded aluminum. Gutter to be notched in the back to allow steel support arms to pass through.
2. Decking: Extruded aluminum 8" wide deck pan in 6063-T6 or 6063-T5 alloy (Roll form is not acceptable)
3. Steel Support Arms: 3" x 3" x .250" Steel tube support arms w/ 8" w x 5"h x 1/2" thick steel plate welded to the back. Must manufacture steel arm in manner to leave room for LED enclosure at back of canopy.
4. Hardware and Fasteners: Nuts, bolts, washers, clevis pins, screws, anchors and pipe spacers to be zinc plated or galvanized steel required to suit application and per pre-engineered canopy load requirements. Typical wall anchors are minimum ½" diameter. Touch up paint must be provided for each canopy to allow for potential repairs in the field.
5. Flashing: Shall be minimum 0.040-inch aluminum, fabricated to prevent leakage and sealed with Novaflex metal roof sealant in custom color match. Another equivalent sealant is acceptable.
6. LED Enclosure: Each canopy is to have a preformed aluminum LED enclosure along the back edge of the canopy finished in the same powder coat as the canopy. 1" nominal inside width, and a minimum aluminum sheet thickness of .063".
7. Scuppers: Drainage for canopy is (2) aluminum scuppers located at the front of the canopy per drawings. See finish below for details.
8. Finish: All aluminum shall be powder coat finish per FGIA 2604 (aka AAMA 2604). Steel shall be commercially blasted, then coated with a zinc rich primer, and finally the top coat of super polyester powder (2604 compliant) applied.

3.1 Installation:

1. Install canopies per manufacturer's written instructions and videos, and as indicated on architectural drawings
2. Locate and place canopies level, plumb and at indicated alignment with adjacent work.
3. Use concealed anchors where possible.
4. Repair damaged finishes so no evidence remains of corrective work. Return items to the factory that cannot be refinished in the field. Make required alterations and refinish entire unit or provide new units.
5. Protect galvanized and nonferrous-metal surfaces from corrosion or galvanic action by applying a coating of bituminous paint or elastomeric coating on surfaces that will be in contact with concrete, masonry or dissimilar metals.

Consultant:
R/A
Red Architecture
589 W. NATIONWIDE BLVD. SUITE B
COLUMBUS, OHIO 43215 (614) 487-8770

BID DOCUMENTS ONLY NOT FOR CONSTRUCTION

COPYRIGHT 2026
ALL DRAWINGS AND SPECIFICATIONS SHALL REMAIN THE PROPERTY OF RED ARCHITECTURE LLC AND MAY NOT BE USED, DUPLICATED, OR ALTERED WITHOUT WRITTEN CONSENT OF THE ARCHITECT.

ECP PARTNERS

CMG HIGHLAND CITY SHELL, FL
TBD US 98
LAKELAND, FL 33812

Issue Record:

02/25/26	PERMIT SET
02/25/26	BID SET

Revisions:

Drawn: JLH,PH
Checked: DM,DF

Project No. EPL002

Contents:

ARCHITECTURAL SPECIFICATIONS

G016

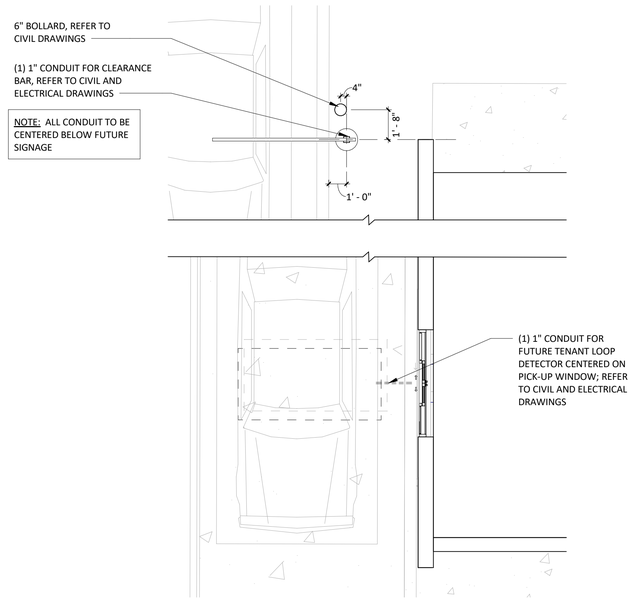

3 SP100 **ARCHITECTURAL SITE PLAN DIMENSIONED**
1/4" = 1'-0"

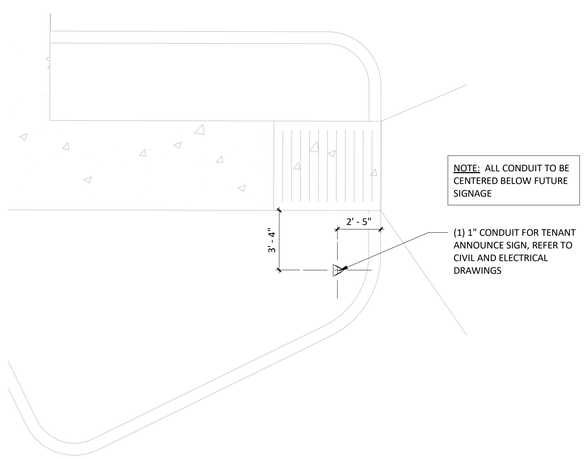

2 SP100 **ARCHITECTURAL SITE PLAN DIMENSIONED**
1/4" = 1'-0"

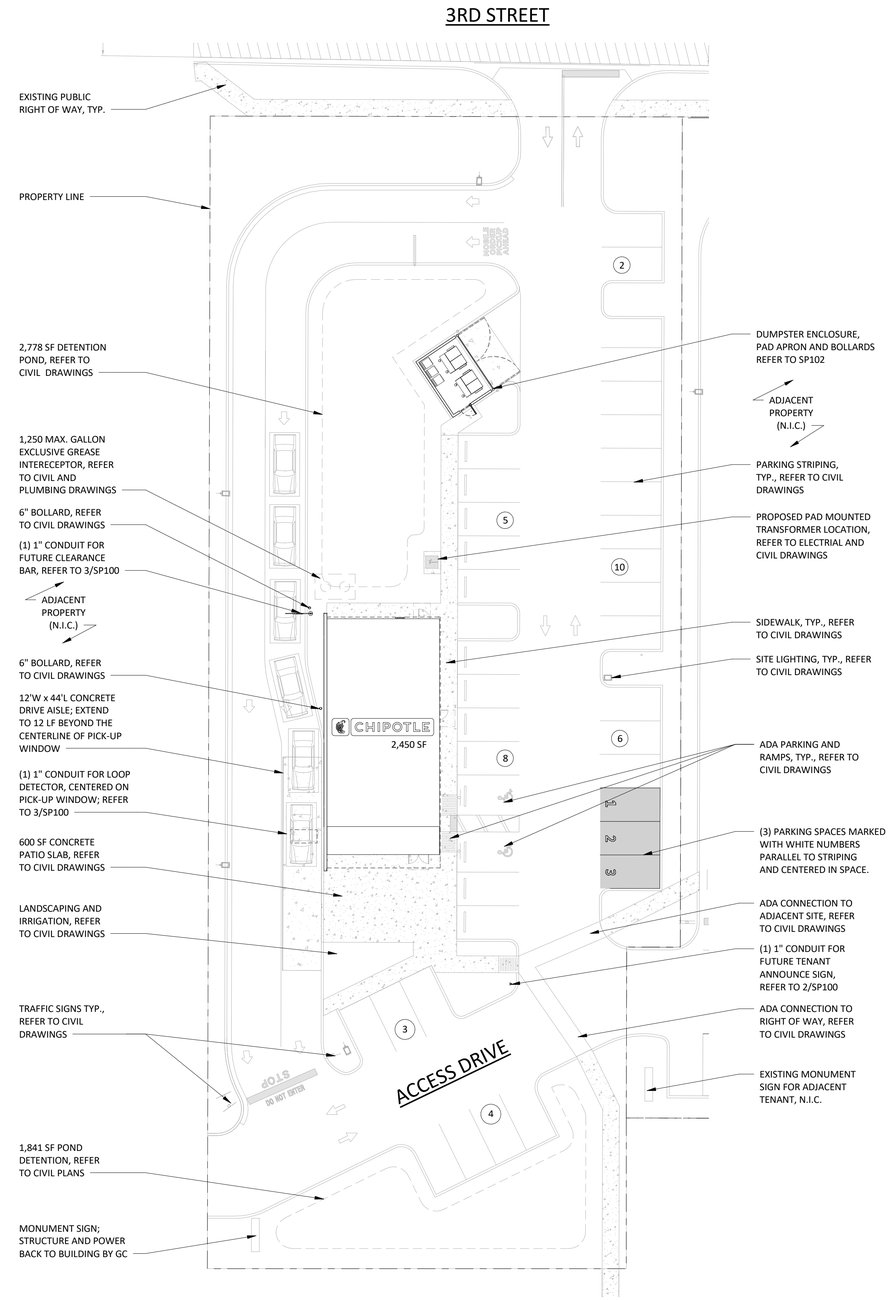

1 SP100 **ARCHITECTURAL SITE PLAN**
3/64" = 1'-0"

Consultant:
R/A
Red Architecture
589 W. NATIONWIDE BLVD. SUITE B
COLUMBUS, OHIO 43215 (614) 487-8770

COPYRIGHT 2025
ALL DRAWINGS AND SPECIFICATIONS SHALL REMAIN THE PROPERTY OF RED ARCHITECTURE LLC AND MAY NOT BE USED, DUPLICATED, OR ALTERED WITHOUT WRITTEN CONSENT OF THE ARCHITECT.

ECP PARTNERS

CMG HIGHLAND CITY SHELL, FL
TBD US 98
LAKELAND, FL 33812

Issue Record:

02/25/26	PERMIT SET
02/25/26	BID SET

Revisions:

Drawn: JLH,PH
Checked: DM,DF

Project No. EPL002

Contents:

ARCHITECTURAL SITE PLAN

SP100

DUMPSTER ENCLOSURE FINISH SCHEDULE

MATERIAL	COLOR/FINISH
CMU - PRIMER	REFER TO PAINT SPECIFICATIONS, COLOR 'WHITE'
CMU	PAINTED 'KNIGHT'S ARMOR' PPG 1001-6
METAL COPING AND DOOR FRAMES	PREFINISHED BLACK
CORRUGATED METAL DOOR PANEL	GALVANIZED

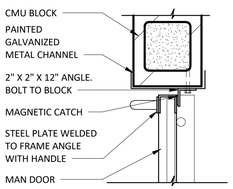

13 SP102 **MAN DOOR LATCH DETAIL**
1 1/2" = 1'-0"

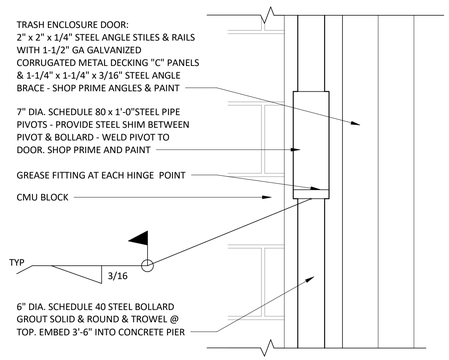

12 SP102 **MAN DOOR PIVOT**
1 1/2" = 1'-0"

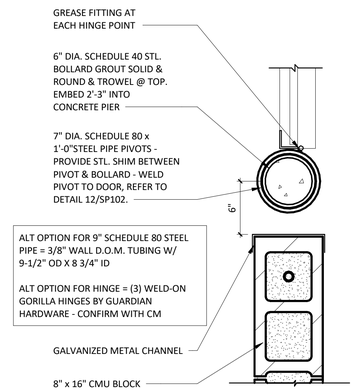

11 SP102 **MAN DOOR PIVOT DETAIL**
1 1/2" = 1'-0"

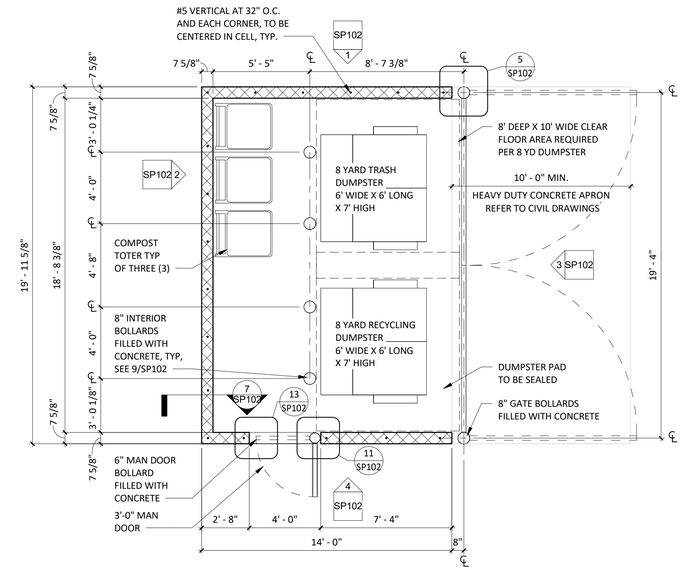

10 SP102 **DUMPSTER PLAN**
1/4" = 1'-0"

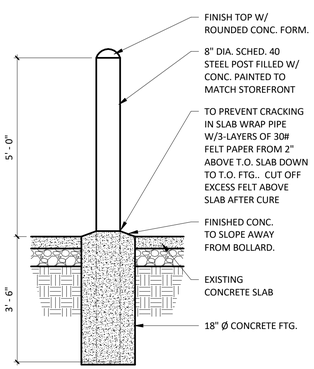

9 SP102 **TYP. BOLLARD DETAIL**
1/2" = 1'-0"

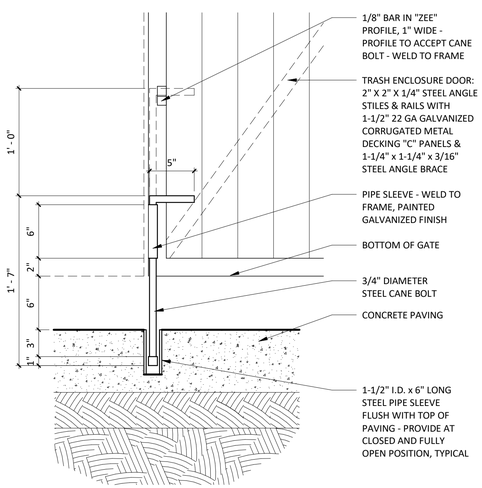

8 SP102 **TYPICAL CANE BOLT DETAIL**
1 1/2" = 1'-0"

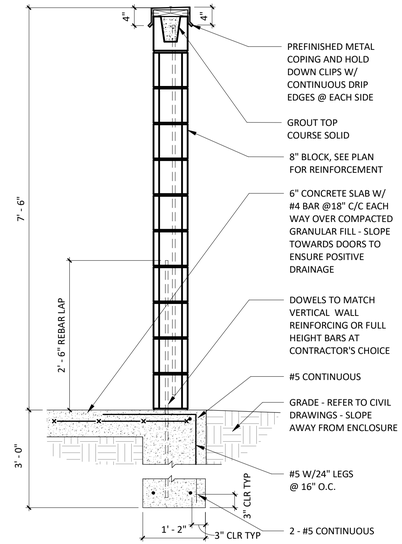

7 SP102 **DUMPSTER DETAIL**
3/4" = 1'-0"

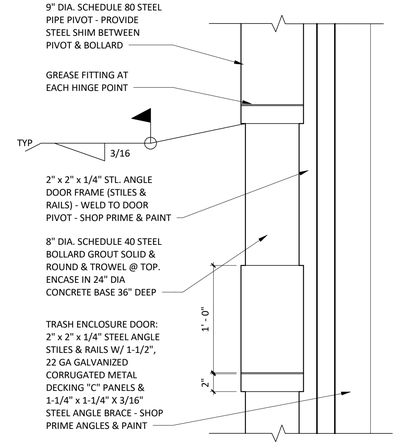

6 SP102 **DUMPSTER DOOR PIVOT**
1 1/2" = 1'-0"

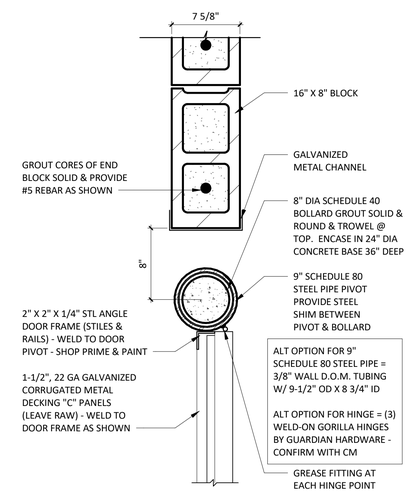

5 SP102 **DUMPSTER WALL DETAIL**
1 1/2" = 1'-0"

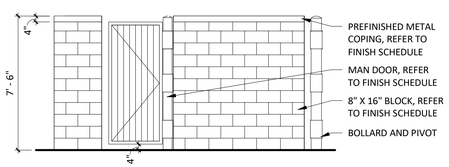

4 SP102 **DUMPSTER ELEVATION**
1/4" = 1'-0"

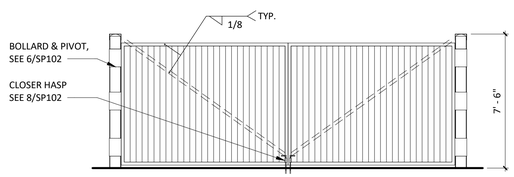

3 SP102 **DUMPSTER ELEVATION**
1/4" = 1'-0"

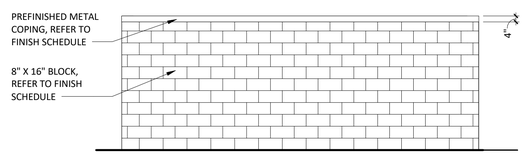

2 SP102 **DUMPSTER ELEVATION**
1/4" = 1'-0"

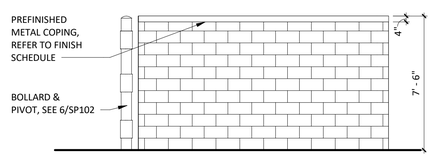

1 SP102 **DUMPSTER ELEVATION**
1/4" = 1'-0"

Consultant:
R/A
Red Architecture
589 W. NATIONWIDE BLVD. SUITE B
COLUMBUS, OHIO 43215 (614) 487-8770

BID DOCUMENTS ONLY NOT FOR CONSTRUCTION

COPYRIGHT 2026
ALL DRAWINGS AND SPECIFICATIONS SHALL REMAIN THE PROPERTY OF RED ARCHITECTURE LLC AND MAY NOT BE USED, DUPLICATED, OR ALTERED WITHOUT WRITTEN CONSENT OF THE ARCHITECT.

ECP PARTNERS

CMG HIGHLAND CITY SHELL, FL
TBD US 98
LAKELAND, FL 33812

Issue Record:

02/25/26	PERMIT SET
02/25/26	BID SET

Revisions:

Drawn: JLH,PH
Checked: DM,DF

Project No. EPL002

Contents: DUMPSTER PLAN & DETAILS

SP102

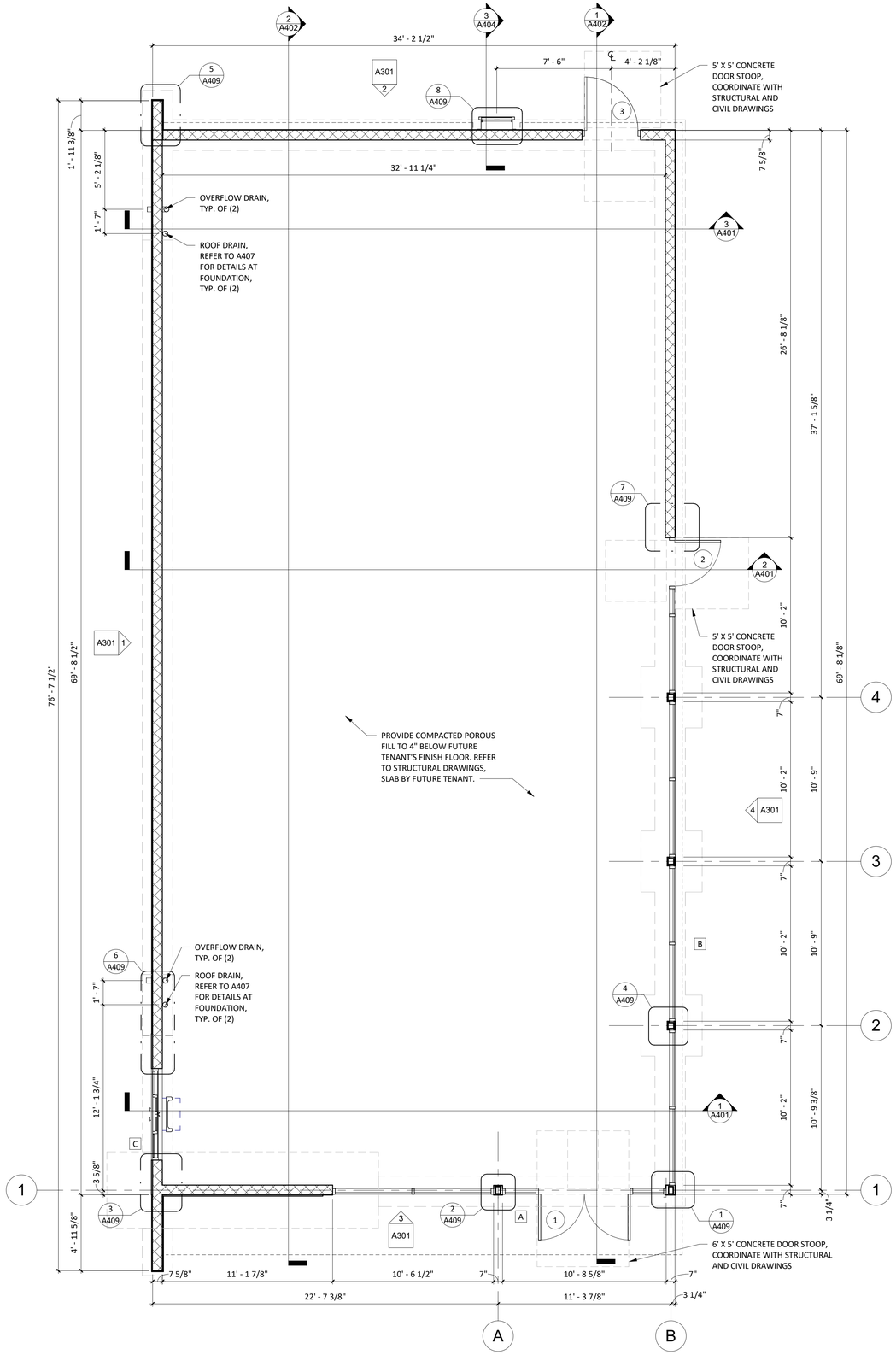

1 A100 **ARCHITECTURAL SHELL PLAN**
1/4" = 1'-0"

CONSTRUCTION NOTES

1. REFER TO A601 FOR DOOR INFORMATION & A602 FOR STOREFRONT DIMENSIONS.
2. ALL DIMENSIONS ARE TO FACE OF FRAMING (STUD WALL) OR CENTERLINE OF STRUCTURE UNLESS NOTES OTHERWISE.
3. SEE STRUCTURAL SHEETS FOR ALL STUD FRAMING CONFIGURATIONS, SIZES, SPACING AND GAUGES.
4. ALL EXTERIOR WOOD BLOCKING TO BE MOISTURE RESISTANT PRESERVATIVE TREATED (P.T.)
5. TAPE SEALANT AT ALL ANCHOR LOCATIONS.
6. ALL FLASHING AND SEAMS BETWEEN SHEATHING IN COMPOSITE WOOD STUD WALL CONSTRUCTION CONDITIONS TO BE TAPED AND SEALED WITH TAPE SEALANT.
7. LAP ALL WEATHER RESISTANT BARRIERS AND THRU-WALL FLASHING IN A WATER SHEDDING FASHION. TAPE ALL EXPOSED EDGES.
8. EXTEND ALL THRU-WALL FLASHING TO 1/4 INCH PAST THE EXTERIOR FACE OF WALL.
9. PROVIDE CONTINUOUS ANCHORAGE FOR ALL THRU-WALL FLASHING.
10. EXTEND FLASHING VERTICALLY A MINIMUM OF 8 INCHES ABOVE THE BASE OF THE FLASHING.
11. APPLY SEALANT TO ALL SHEATHING JOINTS AND FASTENER PENETRATIONS.
12. PROVIDE FULLY ADHERED FLASHING AT ALL WINDOW AND DOOR OPENING HEADS, SILLS AND JAMBS.

TERMITE TREATMENT NOTES

SOIL TREATMENT SHALL COMPLY WITH FBCB, SECTIONS 1816.1.1 THRU 1816.1.6 AND SECTION 1816.2 INCLUDING TREATMENT UNDER ALL CONCRETE OR GRADE WITHIN 12" OF THE OUTSIDE OF THE BUILDING WALLS, AND A VERTICAL CHEMICAL BARRIER APPLIED PROMPTLY AFTER CONSTRUCTION IS COMPLETED. ANY SOIL DISTURBED AFTER THE VERTICAL CHEMICAL BARRIER IS APPLIED SHALL BE PROMPTLY RETREATED. THE LICENSED PEST CONTROL COMPANY DOING THE WORK SHALL ISSUE A CERTIFICATE OF COMPLIANCE TO THE BUILDING DEPARTMENT PER FBC, SECTION 1816.1. TREATMENT SHALL BE WITH A REGISTRED TERMATICIDE LABELED FOR USE IN NEW CONSTRUCTION AS DEFINIED IN FBCB, SECTION 202.

Consultant:
R/A
Red Architecture
589 W. NATIONWIDE BLVD. SUITE B
COLUMBUS, OHIO 43215 (614) 487-8770

COPYRIGHT 2025
ALL DRAWINGS AND SPECIFICATIONS SHALL REMAIN THE PROPERTY OF RED ARCHITECTURE LLC AND MAY NOT BE USED, DUPLICATED, OR ALTERED WITHOUT WRITTEN CONSENT OF THE ARCHITECT.

ECP PARTNERS

CMG HIGHLAND CITY SHELL, FL
TBD US 98
LAKELAND, FL 33812

Issue Record:

02/25/26	PERMIT SET
02/25/26	BID SET

Revisions:

Drawn: JLH,PH
Checked: DM,DF

Project No.
EPL002

Contents:
ARCHITECTURAL SHELL PLAN

A100

GENERAL ROOF NOTES

1.	SEE STRUCTURAL DRAWINGS FOR LOCATIONS AND SIZE OF STRUCTURAL ROOF REINFORCEMENTS.
2.	SEE TENANT PLANS FOR ROOFTOP EQUIPMENT
3.	COORDINATE ALL ROOF PENETRATIONS, FLASHING, AND REPAIR W/ TENANT ROOF TOP EQUIPMENT PRIOR TO COMMENCEMENT OF WORK.
4.	DIMENSIONS FOR ROOF TOP EQUIPMENT WITH CURBS IS TO THE OUTSIDE FACE OF THE CURB. DIMENSIONS FOR EQUIPMENT WITHOUT CURBS ARE TO THE CENTER OF THE UNIT. ALL DIMENSIONS ARE FOR REFERENCE ONLY. ROOFING CONTRACTOR TO ADJUST AS NECESSARY IN FIELD. CONTACT ENGINEERING CONSULTANTS FOR ANY MAJOR MODIFICATIONS TO LAYOUT
5.	JOISTS FOR SHELL BUILDING ARE TO BE DESIGNED FOR THE RTU WEIGHTS AND PLACEMENT EXHIBITED. IF LOCATION OR ORIENTATION OF A UNIT MUST CHANGE, NOTIFY ARCHITECT IMMEDIATELY
6.	SEE TENANT'S PLANS FOR PENETRATION DETAILS AT RTUS AND THE EXHAUST FAN.
7.	PROVIDE TAPERED INSULATION CRICKET AT ALL EQUIPMENT CURBS

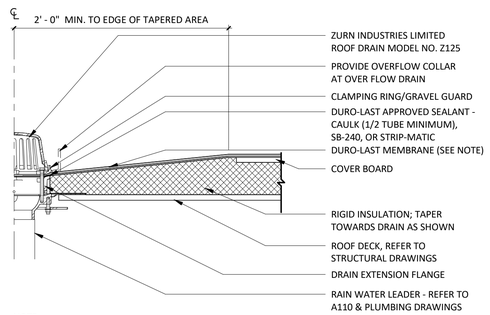

NOTE:
DURO-LAST MEMBRANE MUST EXTEND BEHOND THE INSIDE OF THE CLAMPING RING. BE SURE THE OPENING WHERE WATER PASSES THROUGH THE MEMBRANE IS NOT SMALLER THAN THE OPENING OF THE DRAIN.

3 / A140 ROOF DRAIN DETAIL
1 1/2" = 1'-0"

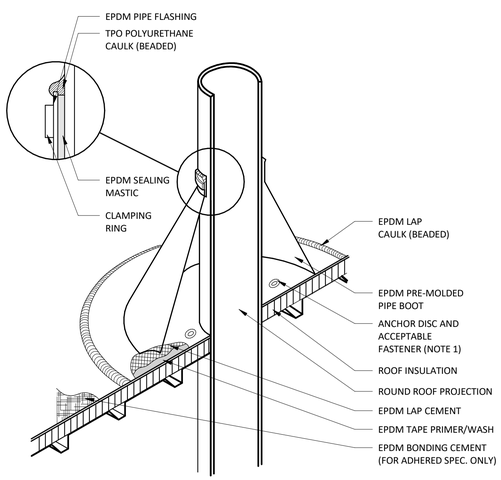

NOTE:

1. WITH MECHANICALLY FASTENED OR BALLASTED SPECIFICATIONS, MEMBRANE MUST BE MECHANICALLY ATTACHED WITH 2" (50 mm) ANCHOR DISC AND ACCEPTABLE FASTENERS (MINIMUM OF 4 PER PIPE).
2. DO NOT OVERLAP THE FLANGES FROM ADJACENT PIPE FLASHINGS.
3. ANY SEAM UNDER BOOT FLANGE TO BE TREATED AS T-JOINT.
4. BOTH SURFACES TO BE MATED MUST BE CLEANED WITH TAPE PRIMER/WASH. EPDM TAPE PRIMER/WASH MUST BE COMPLETELY DRY AND TACK FREE BEFORE APPLYING EPDM LAP CEMENT.

2 / A140 BOOT DETAIL
1/2" = 1'-0"

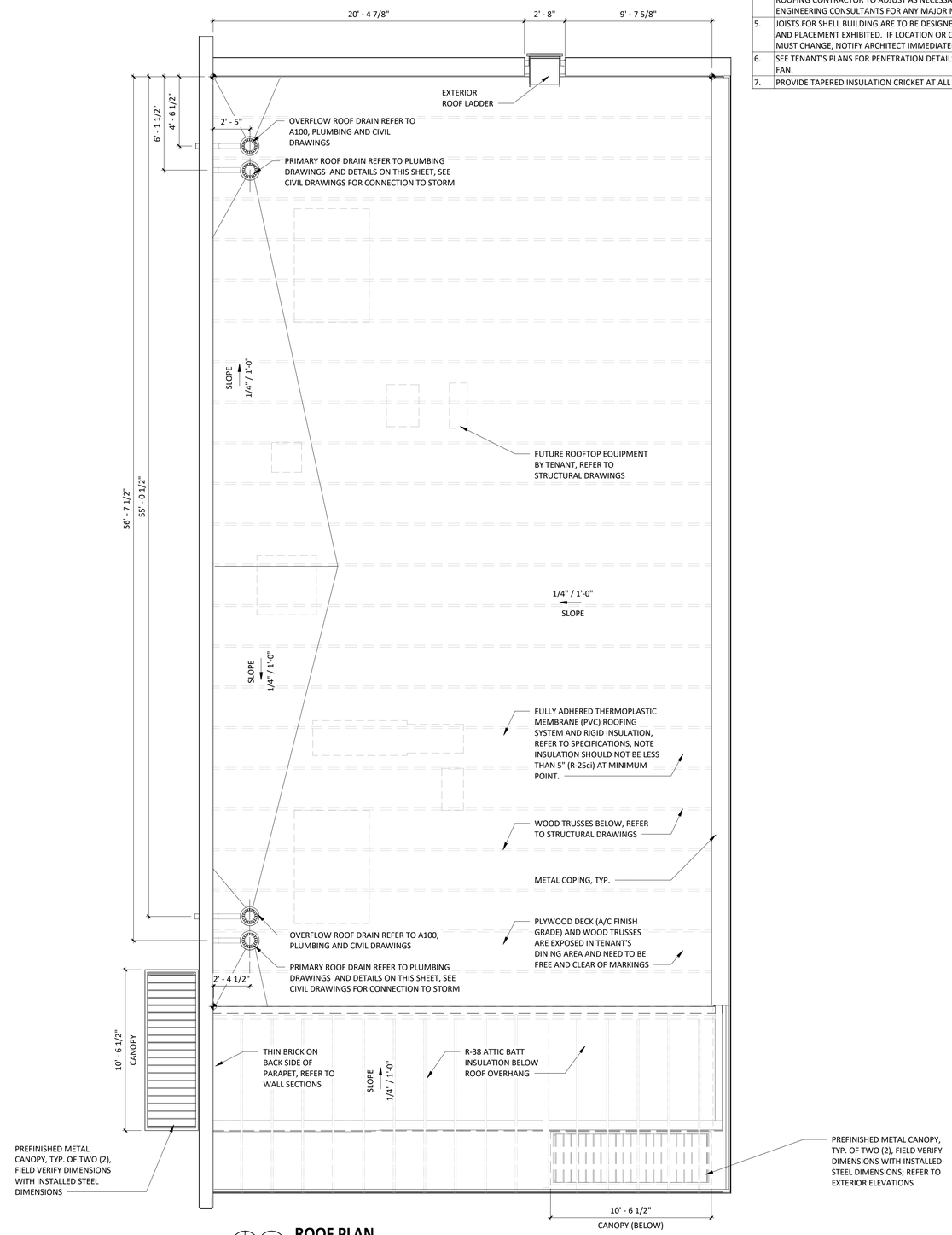

1 / A140 ROOF PLAN
1/4" = 1'-0"

Consultant:
R/A
Red Architecture
589 W. NATIONWIDE BLVD. SUITE B
COLUMBUS, OHIO 43215 (614) 487-8770

BID DOCUMENTS ONLY NOT FOR CONSTRUCTION

COPYRIGHT 2026
ALL DRAWINGS AND SPECIFICATIONS SHALL REMAIN THE PROPERTY OF RED ARCHITECTURE LLC AND MAY NOT BE USED, DUPLICATED, OR ALTERED WITHOUT WRITTEN CONSENT OF THE ARCHITECT.

ECP PARTNERS

CMG HIGHLAND CITY SHELL, FL
TBD US 98
LAKELAND, FL 33812

Issue Record:

02/25/26	PERMIT SET
02/25/26	BID SET

Revisions:

Drawn: JLH,PH
Checked: DM,DF

Project No. EPL002

Contents:

ARCHITECTURAL ROOF PLAN

A140

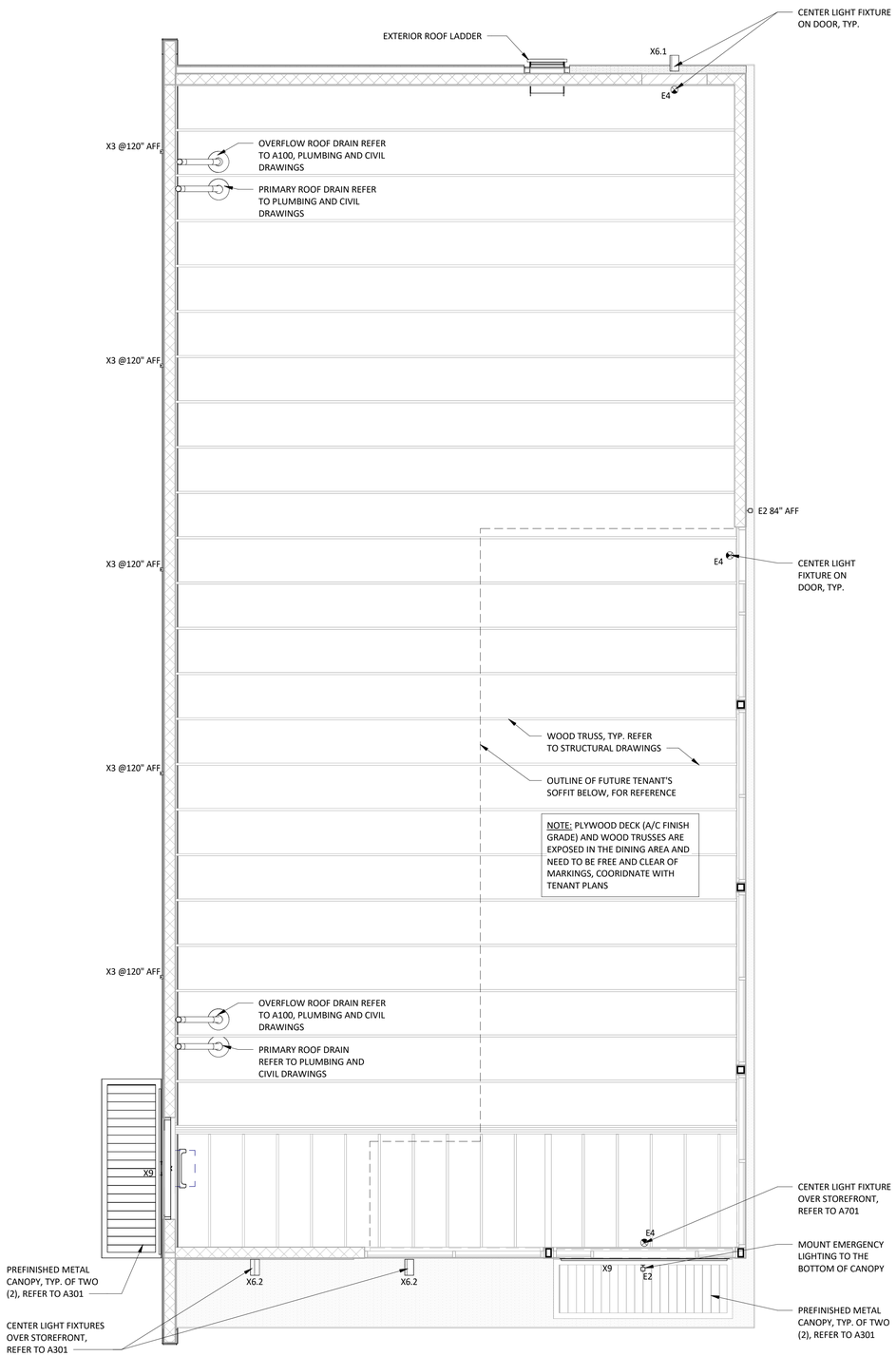

1 A201 **REFLECTED CEILING PLAN**
1/4" = 1'-0"

RCP GENERAL NOTES

1.	ALL UNISTRUT, CONDUIT, SPRINKLER & WATER LINES SHALL BE INSTALLED TO THE BOTTOM OF THE DECK OR AS SHOWN IN DETAILS AND LEFT UNPAINTED
2.	ALL WATER LINES AND EXPOSED PCV SHALL BE INSTALLED UP IN TRUSSES AND PAINTED VICTORIAN PEWTER.
3.	ALL EMERGENCY FIXTURES, LIGHTS AND STROBES SHALL BE ALIGNED OR CENTERED ON WALLS.
4.	ALL FIXTURE AND LAMP SPECIFICATIONS LOCATED ON ELECTRICAL SHEETS.
5.	ALL PARKING LOT LIGHT FIXTURES FIXTURES AND LAMPS INSTALLED BY G.C. REFER TO CIVIL AND ELECTRICAL DRAWINGS.
6.	ALL EXTERIOR BUILDING MOUNTED AND PATIO LIGHT FIXTURES AND LAMPS INSTALLED BY G.C. CAREFULLY REVIEW LIGHTING FIXTURE SCHEDULE ON ELECTRICAL SHEETS.

CONDUIT GUIDELINES

SEE ELECTRICAL DRAWINGS FOR CONDUIT REQUIREMENTS. METAL CLAD CABLE AND FLEXIBLE METAL CONDUIT SHALL NOT BE INSTALLED IN AREAS EXPOSED TO VIEW UNLESS SPECIFICALLY NOTED OTHERWISE.

LIGHT FIXTURE SCHEDULE

E2	2	VARIOUS	EMERGENCY LIGHT - SINGLE HEAD	SEE SHEET E100
E4	3	VARIOUS	WHITE EXIT LIGHT - STANDARD RED LETTERS	SEE SHEET E100
X3	5	SURFACE	EXTERIOR WALL SCONCE	SEE SHEET E100
X6.1	1	WALL	BRONZE WALL PACK, W/BATTERY BACKUP	SEE SHEET E100
X6.2	2	WALL	BRONZE WALL PACK	SEE SHEET E100
X9	2	SURFACE	LED CHANNEL LIGHT	SEE SHEET E100

Consultant:
R/A
Red Architecture
589 W. NATIONWIDE BLVD. SUITE B
COLUMBUS, OHIO 43215 (614) 487-8770

BID DOCUMENTS ONLY NOT FOR CONSTRUCTION

COPYRIGHT 2026
ALL DRAWINGS AND SPECIFICATIONS SHALL REMAIN THE PROPERTY OF RED ARCHITECTURE LLC AND MAY NOT BE USED, DUPLICATED, OR ALTERED WITHOUT WRITTEN CONSENT OF THE ARCHITECT.

ECP PARTNERS

CMG HIGHLAND CITY SHELL, FL
TBD US 98
LAKELAND, FL 33812

Issue Record:

02/25/26	PERMIT SET
02/25/26	BID SET

Revisions:

Drawn: JLH,PH
Checked: DM,DF

Project No. EPL002

Contents:

REFLECTED CEILING PLAN

A201

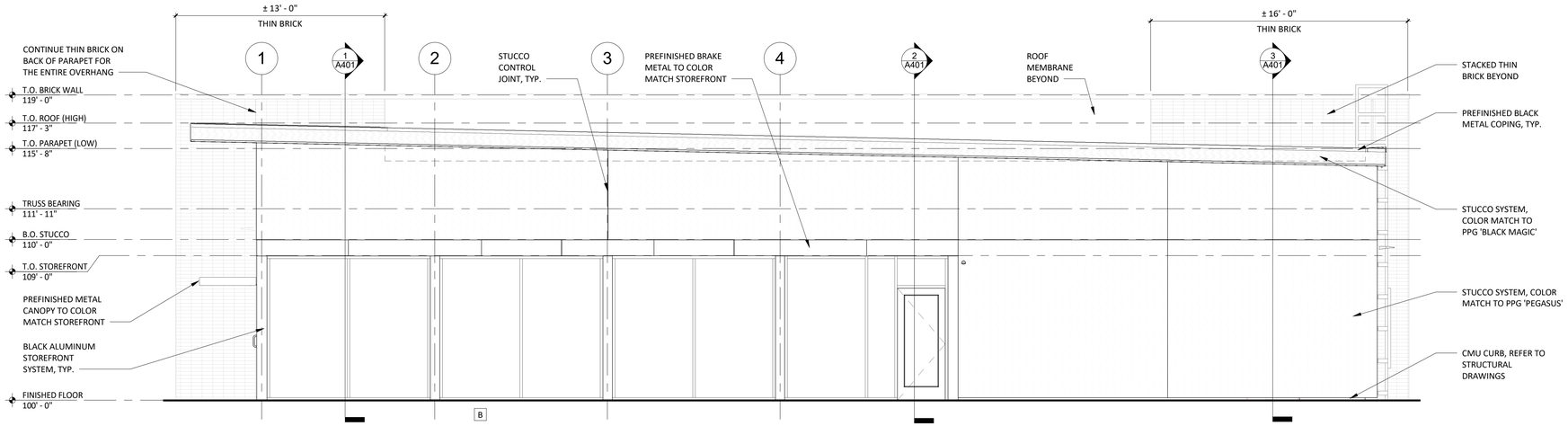

4 A301 **EXT ELEV - SOUTH**
1/4" = 1'-0"

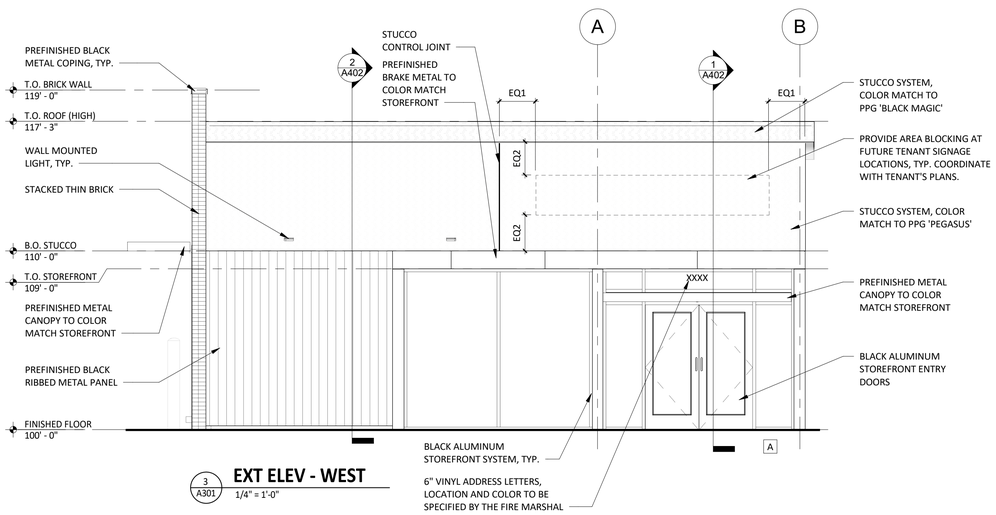

3 A301 **EXT ELEV - WEST**
1/4" = 1'-0"

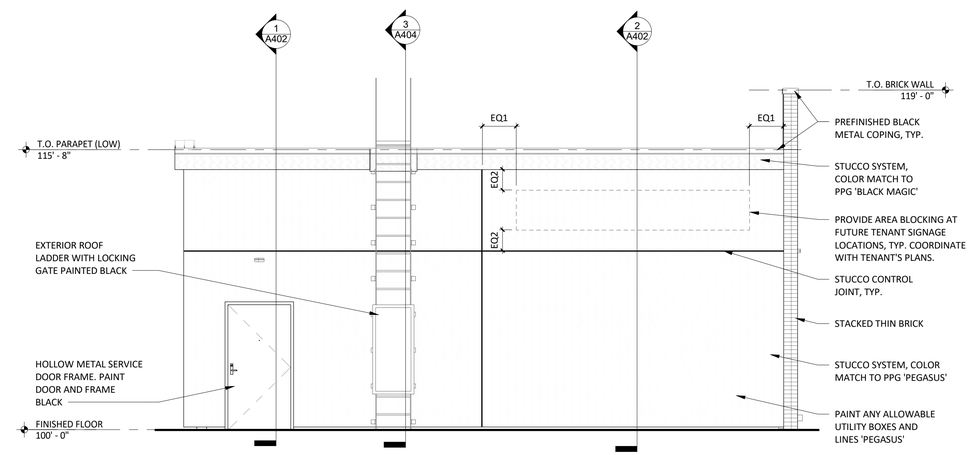

2 A301 **EXT ELEV - EAST**
1/4" = 1'-0"

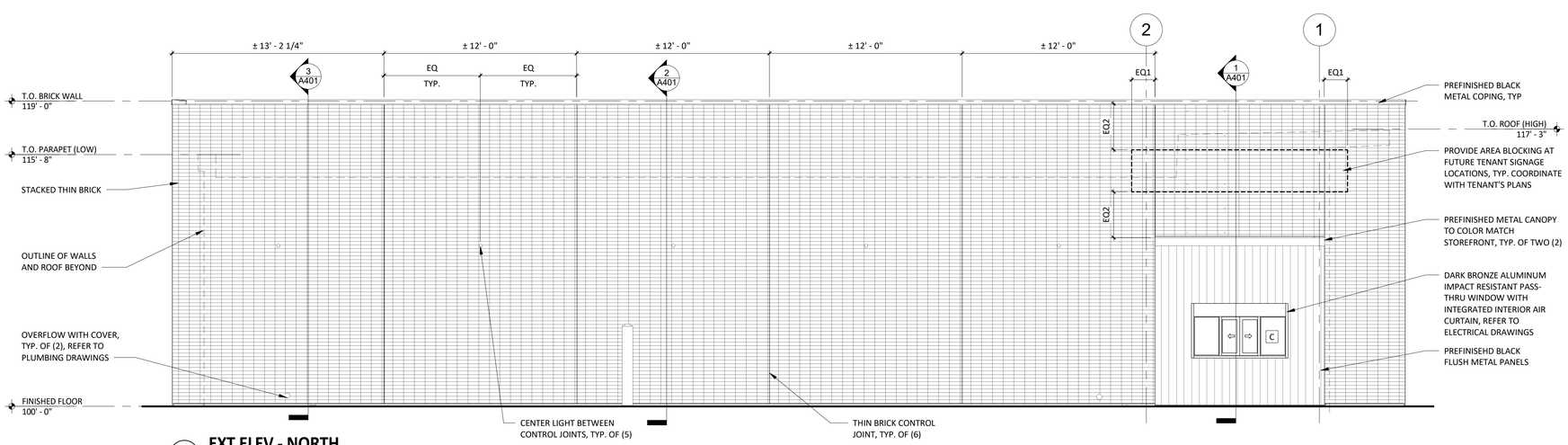

1 A301 **EXT ELEV - NORTH**
1/4" = 1'-0"

Consultant:
R/A
Red Architecture
589 W. NATIONWIDE BLVD. SUITE B
COLUMBUS, OHIO 43215 (614) 487-8770

COPYRIGHT 2025
ALL DRAWINGS AND SPECIFICATIONS SHALL REMAIN THE PROPERTY OF RED ARCHITECTURE LLC AND MAY NOT BE USED, DUPLICATED, OR ALTERED WITHOUT WRITTEN CONSENT OF THE ARCHITECT.

ECP PARTNERS

CMG HIGHLAND CITY SHELL, FL
TBD US 98
LAKELAND, FL 33812

Issue Record:

02/25/26	PERMIT SET
02/25/26	BID SET

Revisions:

Drawn: JLH,PH
Checked: DM,DF

Project No. EPL002

Contents:

EXTERIOR ELEVATIONS

A301

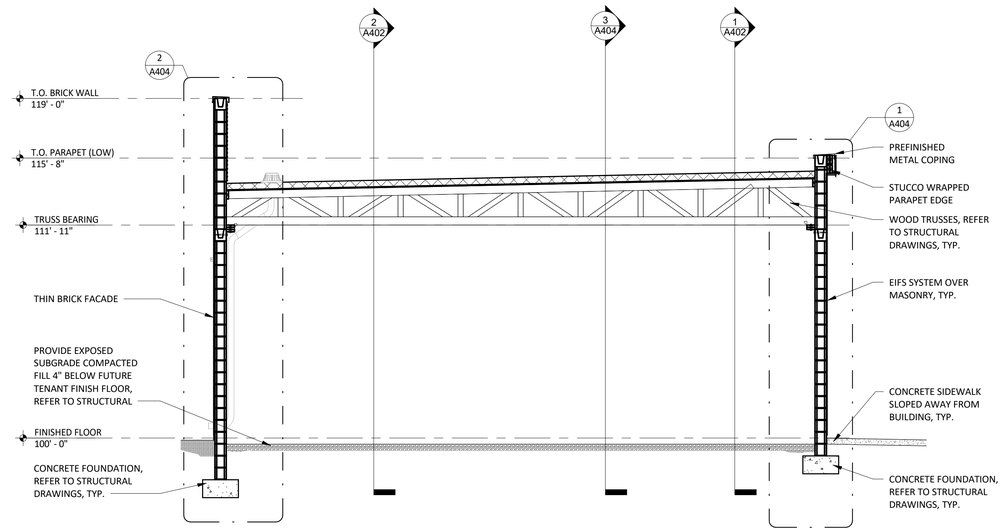

3 A401 **BUILDING SECTION**
1/4" = 1'-0"

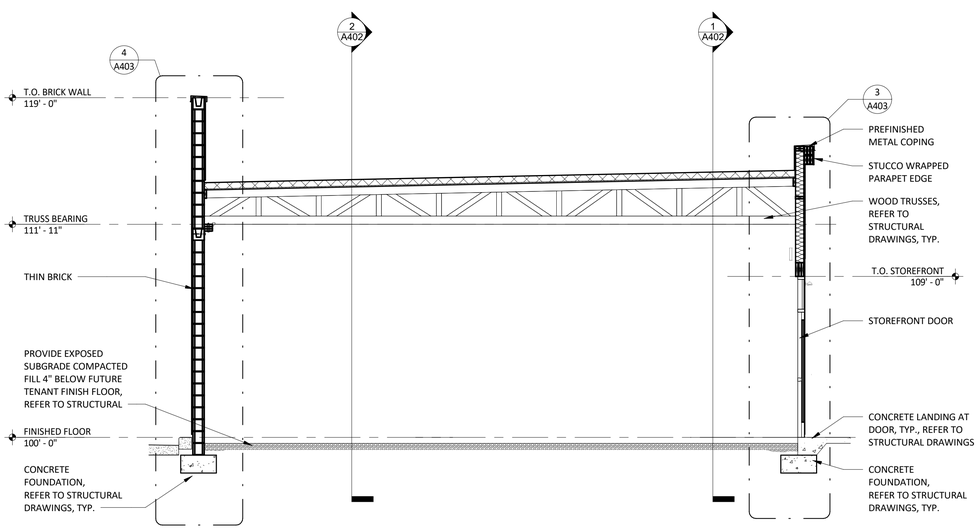

2 A401 **BUILDING SECTION**
1/4" = 1'-0"

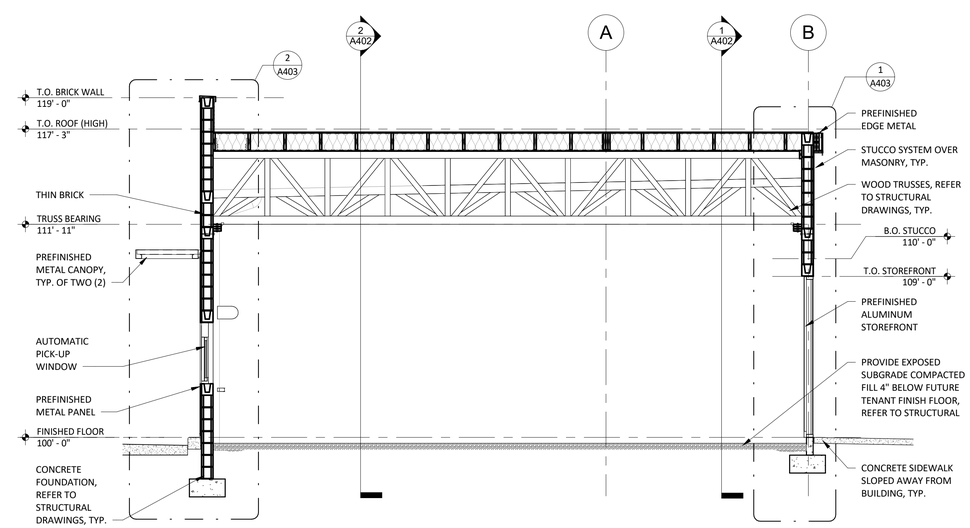

1 A401 **BUILDING SECTION**
1/4" = 1'-0"

Consultant:
R/A
Red Architecture
589 W. NATIONWIDE BLVD. SUITE B
COLUMBUS, OHIO 43215 (614) 487-8770

BID DOCUMENTS ONLY NOT FOR CONSTRUCTION

COPYRIGHT 2026
ALL DRAWINGS AND SPECIFICATIONS SHALL REMAIN THE PROPERTY OF RED ARCHITECTURE LLC AND MAY NOT BE USED, DUPLICATED, OR ALTERED WITHOUT WRITTEN CONSENT OF THE ARCHITECT.

ECP PARTNERS

CMG HIGHLAND CITY SHELL, FL
TBD US 98
LAKELAND, FL 33812

Issue Record:

02/25/26	PERMIT SET
02/25/26	BID SET

Revisions:

Drawn: JLH,PH
Checked: DM,DF

Project No.
EPL002

Contents:
BUILDING SECTIONS

A401

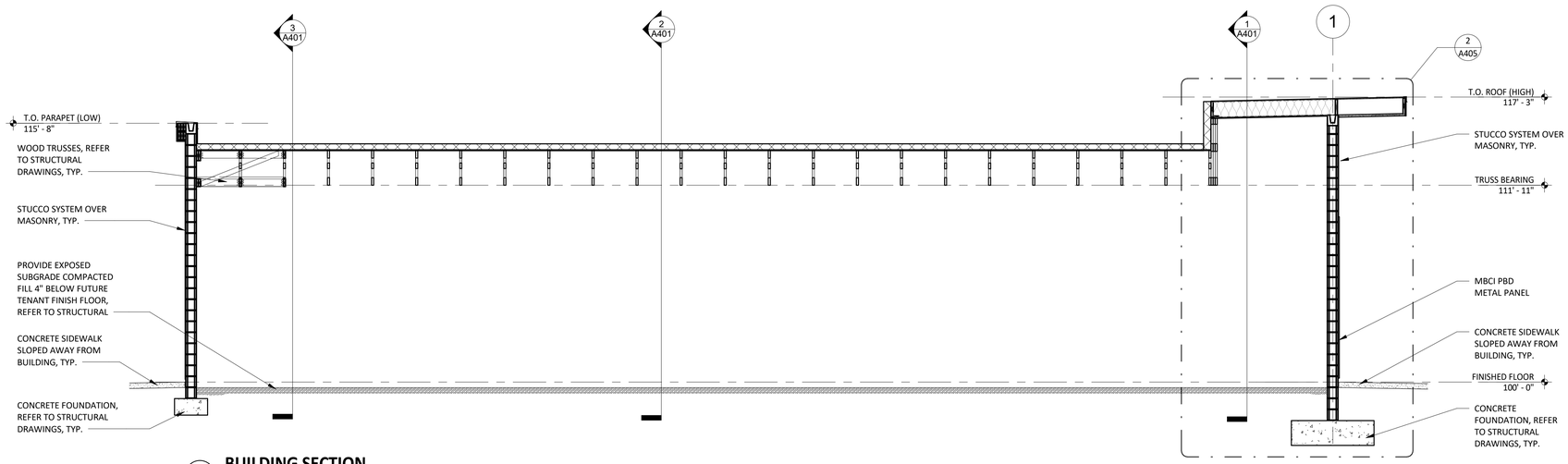

2 A402 **BUILDING SECTION**
1/4" = 1'-0"

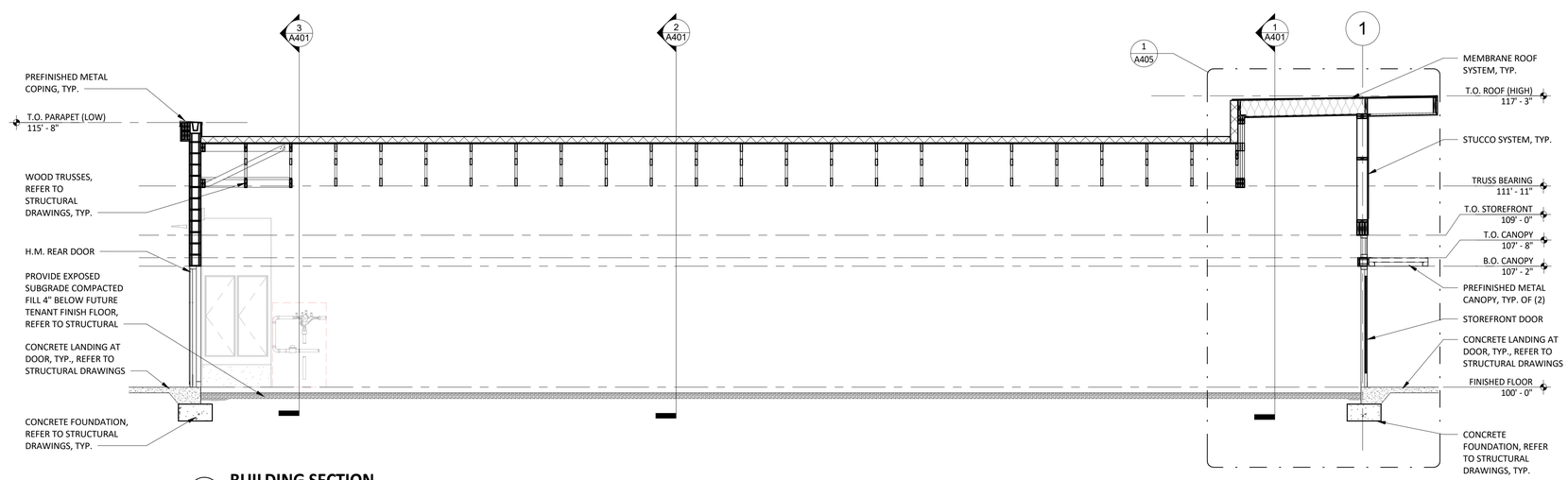

1 A402 **BUILDING SECTION**
1/4" = 1'-0"

Consultant:

R/A
Red Architecture

589 W. NATIONWIDE BLVD. SUITE B
COLUMBUS, OHIO 43215 (614) 487-8770

BID DOCUMENTS ONLY NOT FOR CONSTRUCTION

COPYRIGHT 2026
ALL DRAWINGS AND SPECIFICATIONS SHALL REMAIN THE PROPERTY OF RED ARCHITECTURE LLC AND MAY NOT BE USED, DUPLICATED, OR ALTERED WITHOUT WRITTEN CONSENT OF THE ARCHITECT.

ECP PARTNERS

CMG HIGHLAND CITY SHELL, FL
TBD US 98
LAKELAND, FL 33812

Issue Record:

02/25/26	PERMIT SET
02/25/26	BID SET

Revisions:

Drawn: JLH,PH
Checked: DM,DF

Project No. EPL002

Contents:

BUILDING SECTIONS

A402

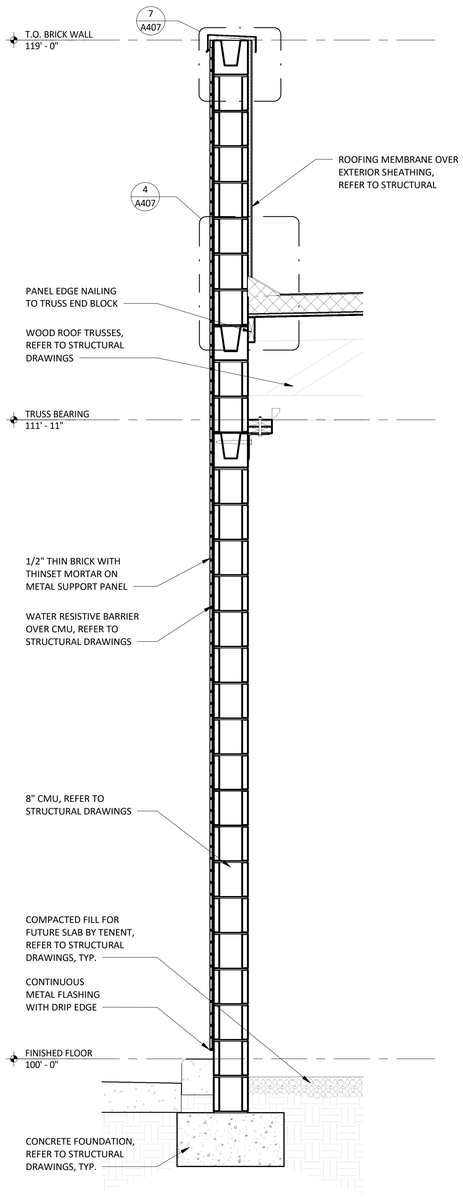

4 A403 **WALL SECTION**
3/4" = 1'-0"

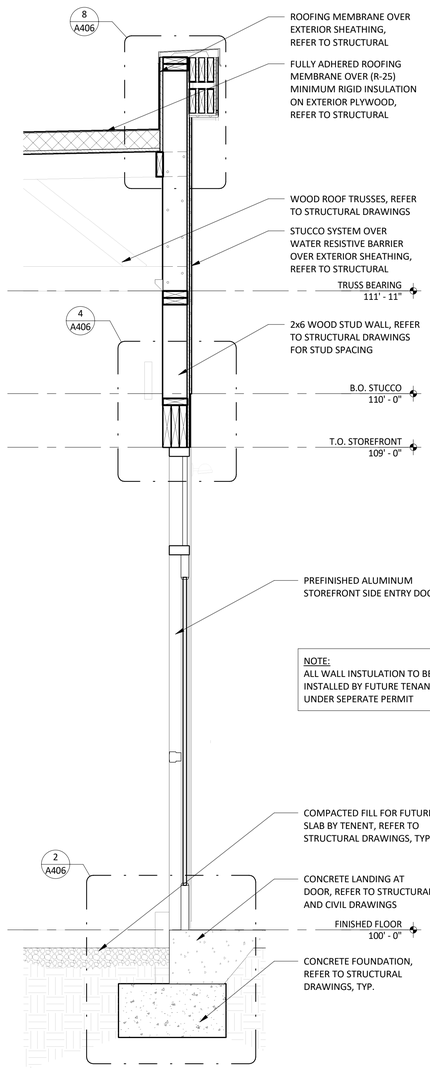

3 A403 **WALL SECTION**
3/4" = 1'-0"

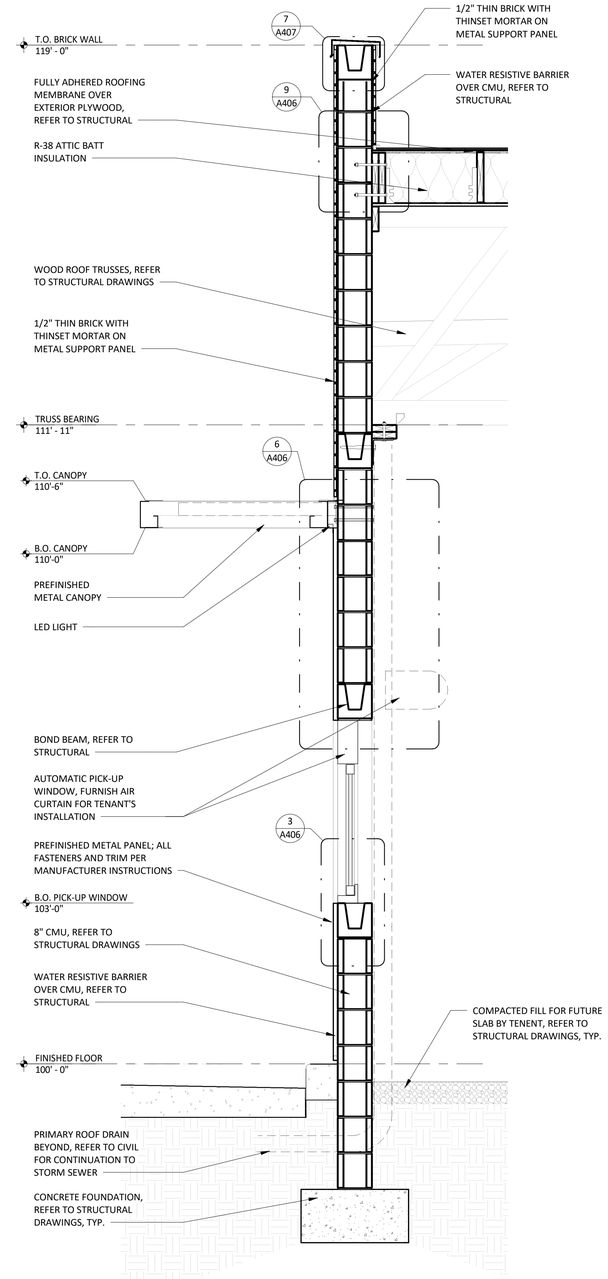

2 A403 **WALL SECTION**
3/4" = 1'-0"

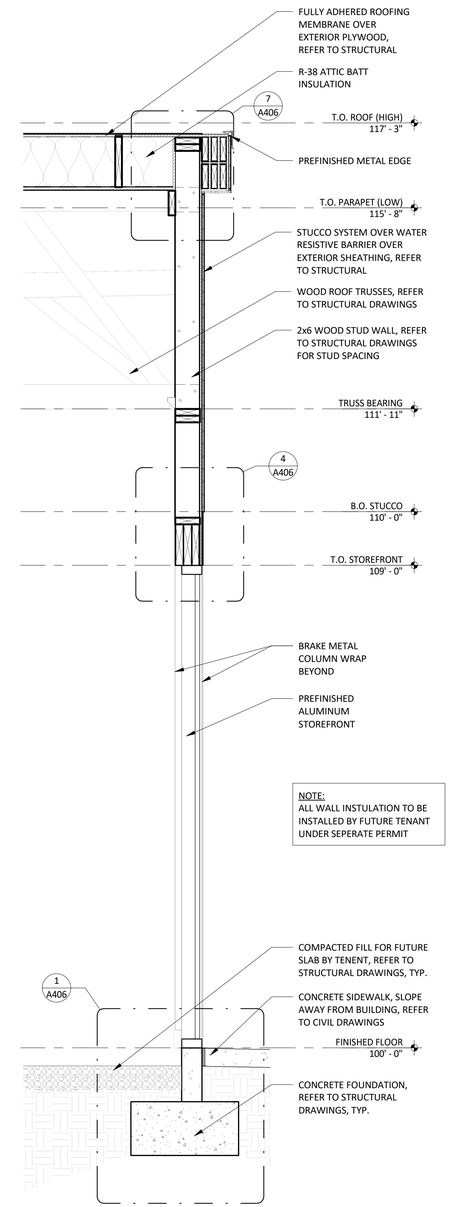

1 A403 **WALL SECTION**
3/4" = 1'-0"

Consultant:
R/A
Red Architecture
589 W. NATIONWIDE BLVD. SUITE B
COLUMBUS, OHIO 43215 (614) 487-8770

BID DOCUMENTS
ONLY NOT FOR
CONSTRUCTION

COPYRIGHT 2026
ALL DRAWINGS AND SPECIFICATIONS SHALL
REMAIN THE PROPERTY OF RED ARCHITECTURE LLC
AND MAY NOT BE USED, DUPLICATED, OR ALTERED
WITHOUT WRITTEN CONSENT OF THE ARCHITECT.

ECP PARTNERS

CMG HIGHLAND CITY SHELL, FL
TBD US 98
LAKELAND, FL 33812

Issue Record:

02/25/26	PERMIT SET
02/25/26	BID SET

Revisions:

Drawn: JLH,PH
Checked: DM,DF

Project No.
EPL002

Contents:
WALL SECTIONS

A403

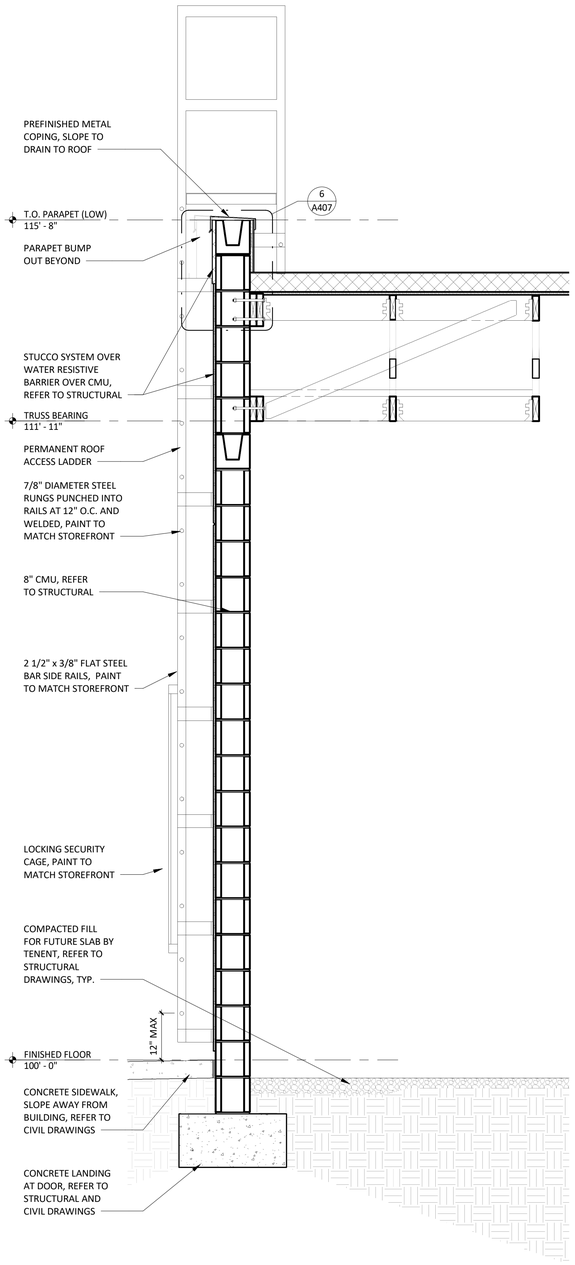

3 A404 **WALL SECTION @ ROOF LADDER**
3/4" = 1'-0"

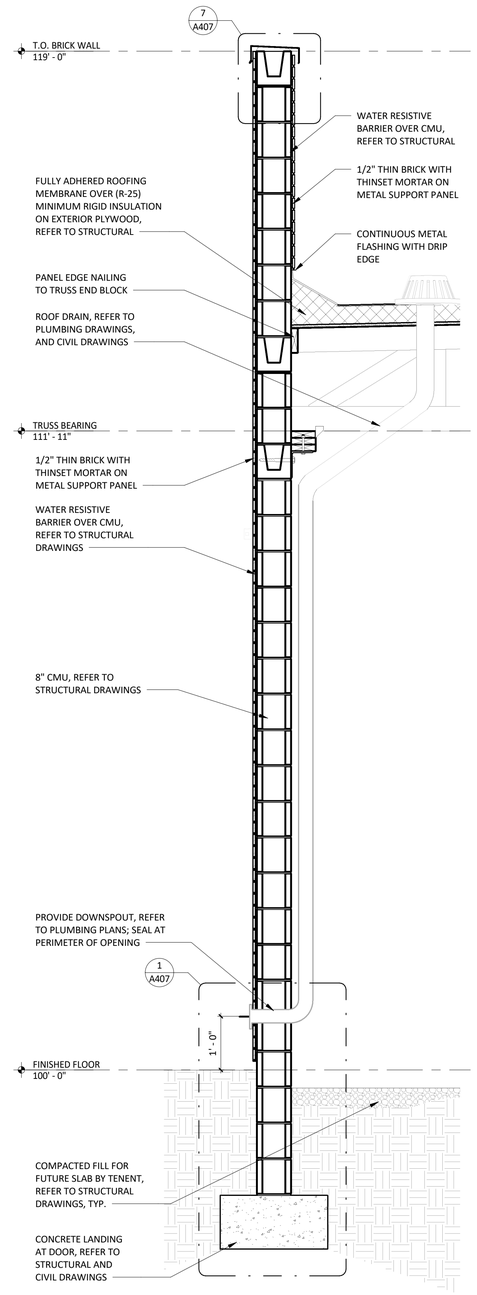

2 A404 **WALL SECTION**
3/4" = 1'-0"

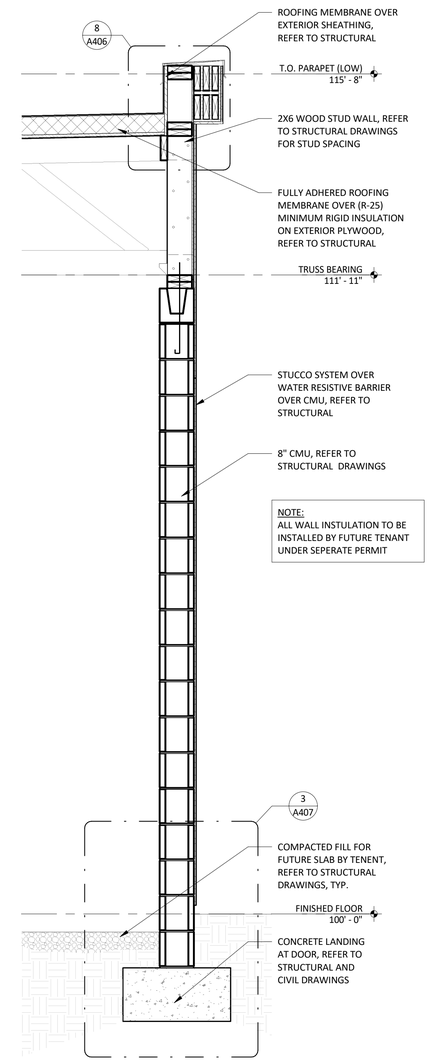

NOTE:
ALL WALL INSTULATION TO BE INSTALLED BY FUTURE TENANT UNDER SEPERATE PERMIT

1 A404 **WALL SECTION**
3/4" = 1'-0"

Consultant:
R/A
Red Architecture
589 W. NATIONWIDE BLVD. SUITE B
COLUMBUS, OHIO 43215 (614) 487-8770

BID DOCUMENTS ONLY NOT FOR CONSTRUCTION

COPYRIGHT 2026
ALL DRAWINGS AND SPECIFICATIONS SHALL REMAIN THE PROPERTY OF RED ARCHITECTURE LLC AND MAY NOT BE USED, DUPLICATED, OR ALTERED WITHOUT WRITTEN CONSENT OF THE ARCHITECT.

ECP PARTNERS

CMG HIGHLAND CITY SHELL, FL
TBD US 98
LAKELAND, FL 33812

Issue Record:

02/25/26	PERMIT SET
02/25/26	BID SET

Revisions:

Drawn: JLH,PH
Checked: DM,DF

Project No.
EPL002

Contents:
WALL SECTIONS

A404

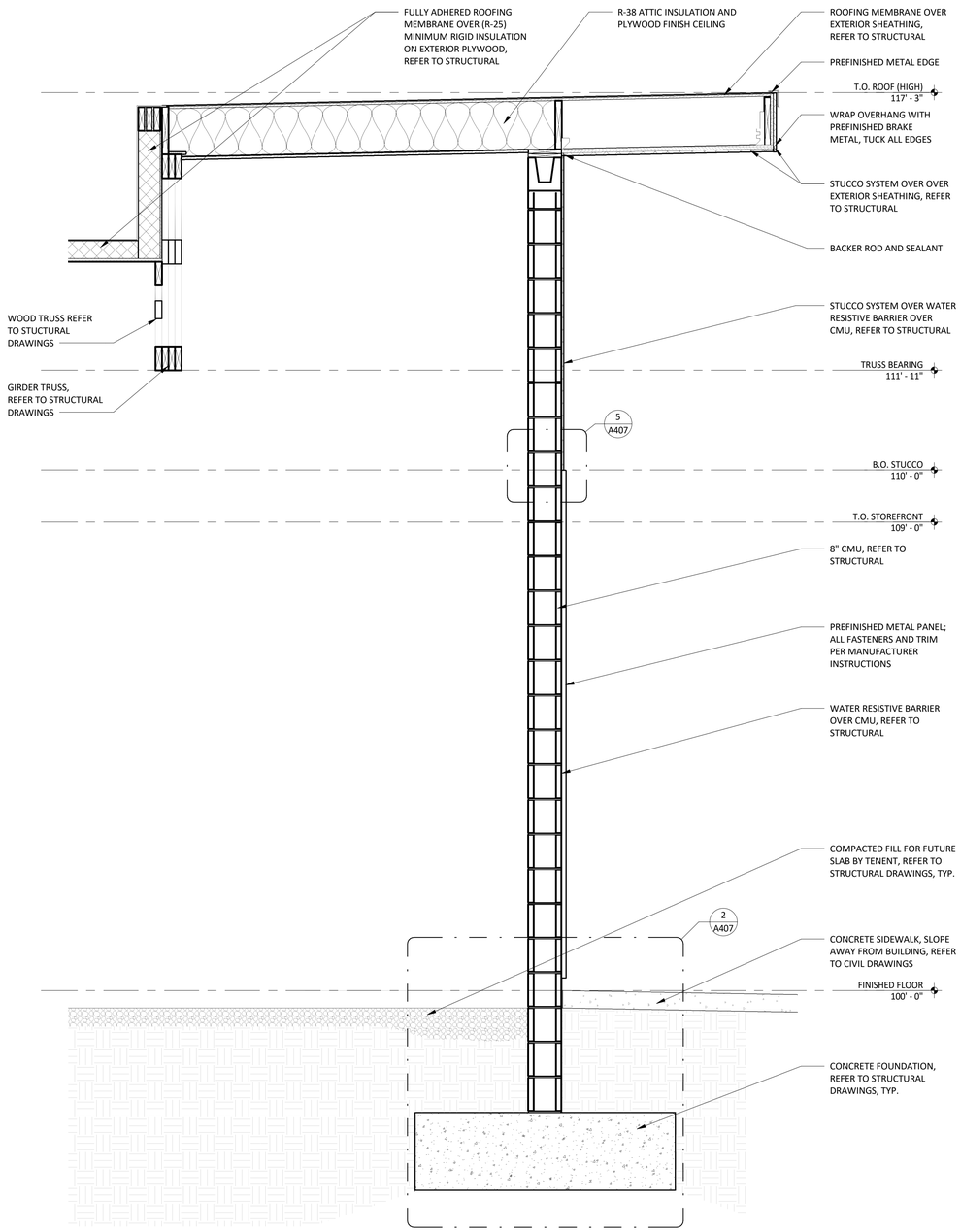

2 A405 **WALL SECTION**
3/4" = 1'-0"

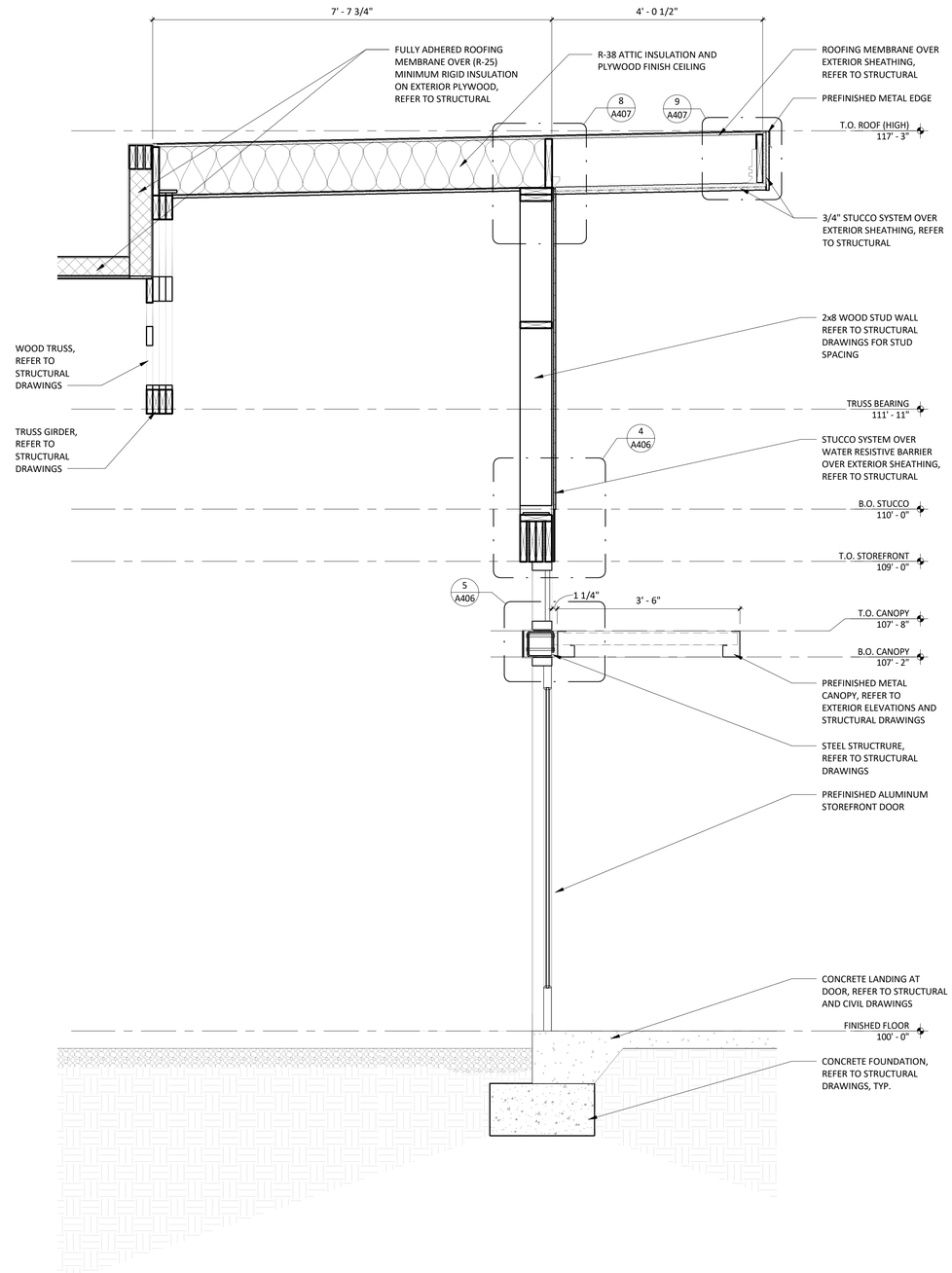

1 A405 **WALL SECTION**
3/4" = 1'-0"

Consultant:
R/A
Red Architecture
589 W. NATIONWIDE BLVD. SUITE B
COLUMBUS, OHIO 43215 (614) 487-8770

BID DOCUMENTS ONLY NOT FOR CONSTRUCTION

COPYRIGHT 2026
ALL DRAWINGS AND SPECIFICATIONS SHALL REMAIN THE PROPERTY OF RED ARCHITECTURE LLC AND MAY NOT BE USED, DUPLICATED, OR ALTERED WITHOUT WRITTEN CONSENT OF THE ARCHITECT.

ECP PARTNERS

CMG HIGHLAND CITY SHELL, FL
TBD US 98
LAKELAND, FL 33812

Issue Record:

02/25/26	PERMIT SET
02/25/26	BID SET

Revisions:

Drawn: JLH,PH
Checked: DM,DF

Project No.
EPL002

Contents:
WALL SECTIONS

A405

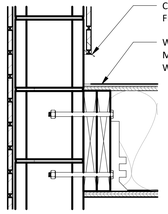

9 A406 **PARAPET DETAIL @ OVERHANG**
1 1/2" = 1'-0"

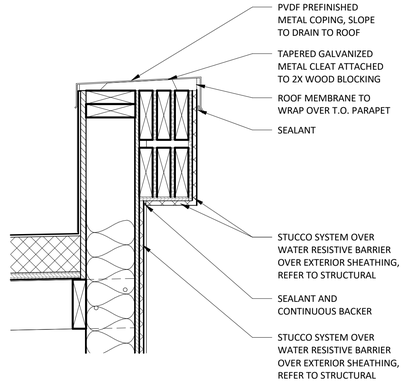

8 A406 **PARAPET DETAIL**
1 1/2" = 1'-0"

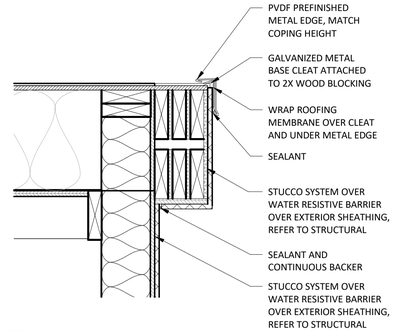

7 A406 **PARAPET DETAIL**
1 1/2" = 1'-0"

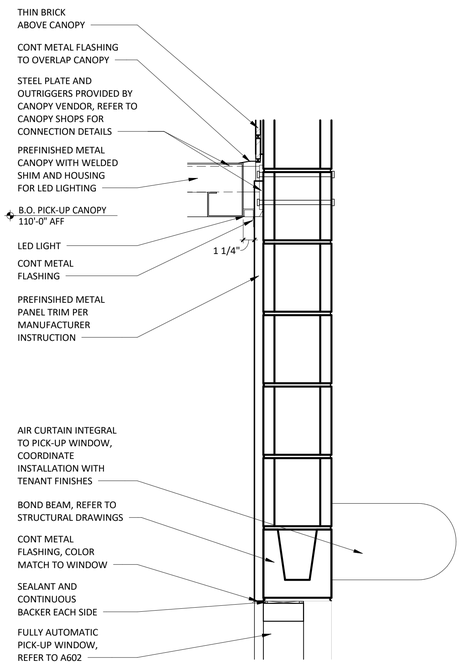

6 A406 **CANOPY DETAIL @ PICK-UP WINDOW**
1 1/2" = 1'-0"

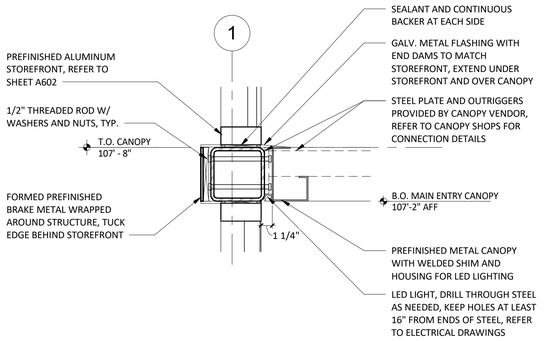

5 A406 **CANOPY DETAIL @ MAIN ENTRY**
1 1/2" = 1'-0"

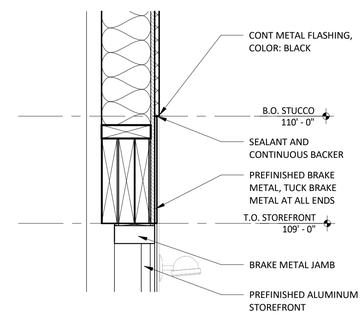

4 A406 **EIFS @ BRAKE METAL**
1 1/2" = 1'-0"

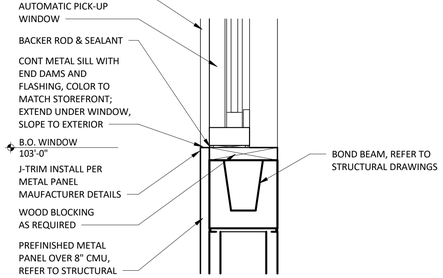

3 A406 **SILL DETAIL @ PICK-UP WINDOW**
1 1/2" = 1'-0"

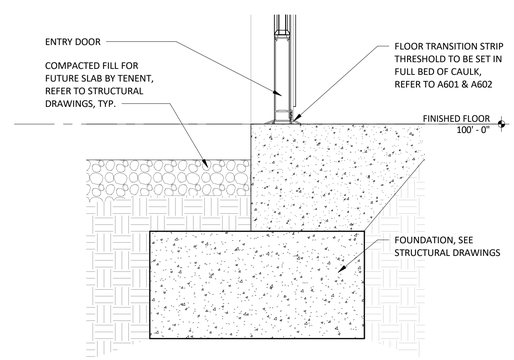

2 A406 **FOUNDATION DETAIL @ STOREFRONT DOOR**
1 1/2" = 1'-0"

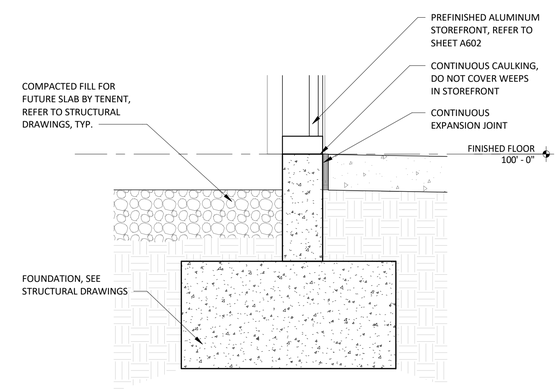

1 A406 **FOUNDATION DETAIL @ STOREFRONT**
1 1/2" = 1'-0"

Consultant:
R/A
Red Architecture
589 W. NATIONWIDE BLVD. SUITE B
COLUMBUS, OHIO 43215 (614) 487-8770

BID DOCUMENTS ONLY NOT FOR CONSTRUCTION

COPYRIGHT 2026
ALL DRAWINGS AND SPECIFICATIONS SHALL REMAIN THE PROPERTY OF RED ARCHITECTURE LLC AND MAY NOT BE USED, DUPLICATED, OR ALTERED WITHOUT WRITTEN CONSENT OF THE ARCHITECT.

ECP PARTNERS

CMG HIGHLAND CITY SHELL, FL
TBD US 98
LAKELAND, FL 33812

Issue Record:

02/25/26	PERMIT SET
02/25/26	BID SET

Revisions:

Drawn: JLH,PH
Checked: DM,DF

Project No. EPL002

Contents:
SECTION DETAILS

A406

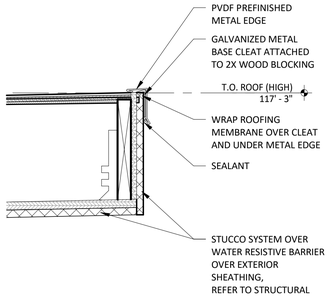

9 / A407 **OVERHANG EDGE DETAIL**
1 1/2" = 1'-0"

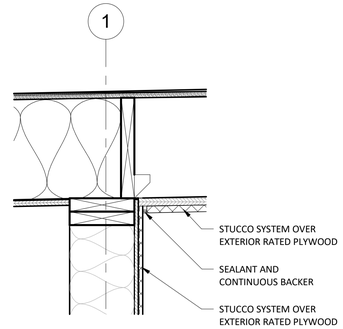

8 / A407 **EIFS INSIDE CORNER DETAIL @ OVERHANG**
1 1/2" = 1'-0"

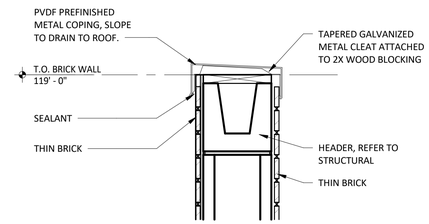

7 / A407 **PARAPET DETAIL**
1 1/2" = 1'-0"

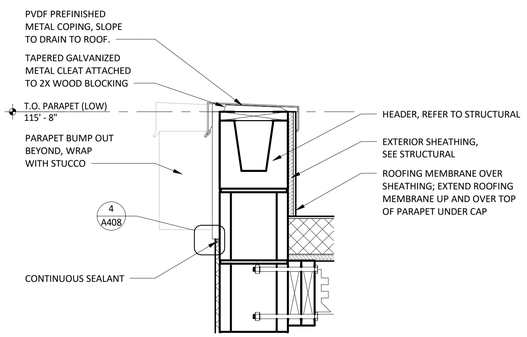

6 / A407 **PARAPET DETAIL @ ROOF LADDER**
1 1/2" = 1'-0"

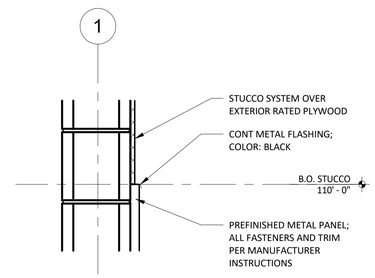

5 / A407 **METAL PANEL & EIFS DETAIL**
1 1/2" = 1'-0"

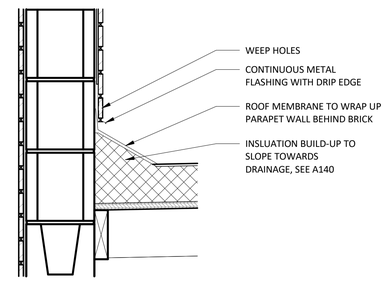

4 / A407 **PARAPET DETAIL @ THIN BRICK**
1 1/2" = 1'-0"

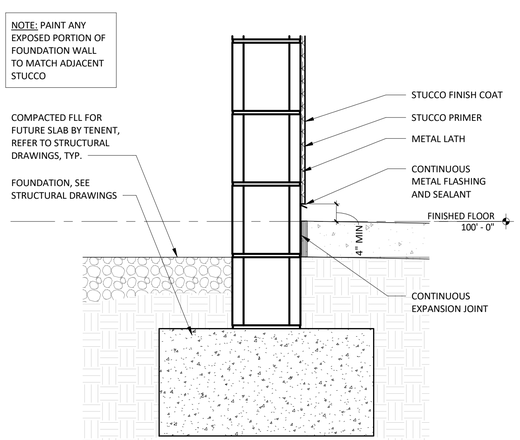

3 / A407 **FOUNDATION DETAIL @ STUCCO**
1 1/2" = 1'-0"

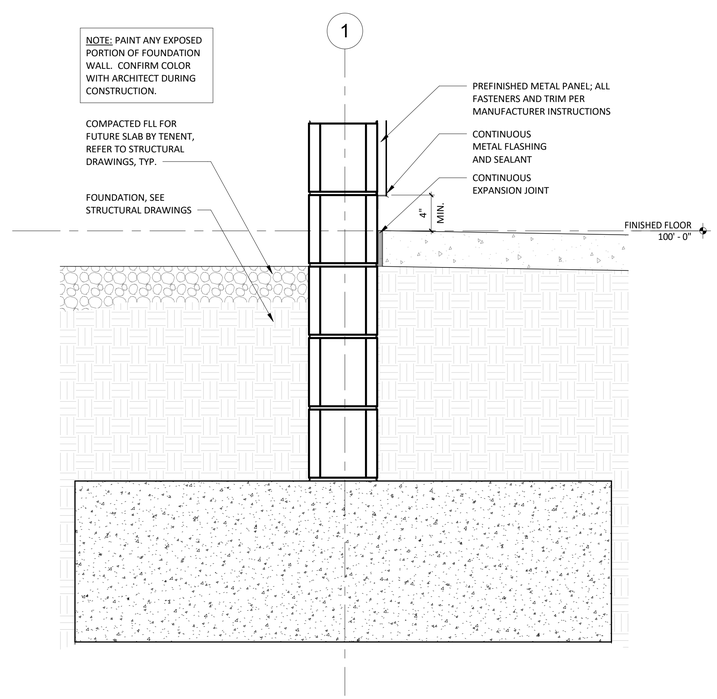

2 / A407 **FOUNDATION DETAIL @ METAL PANEL**
1 1/2" = 1'-0"

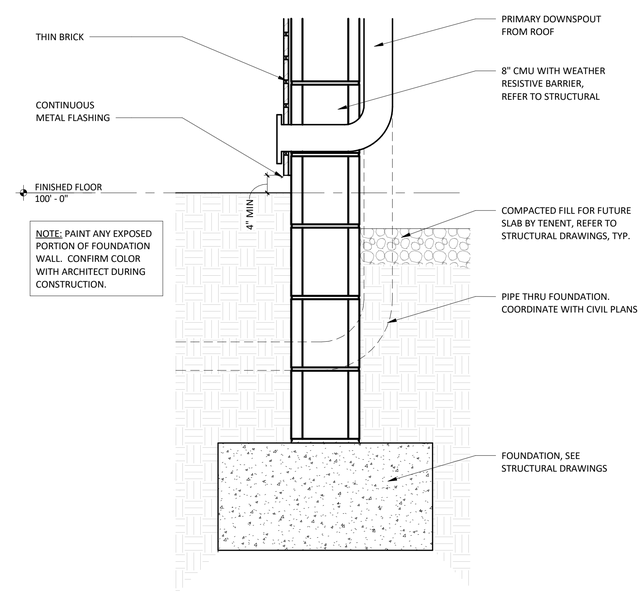

1 / A407 **FOUNDATION DETAIL @ THIN BRICK**
1 1/2" = 1'-0"

Consultant:

R/A
Red Architecture

589 W. NATIONWIDE BLVD. SUITE B
COLUMBUS, OHIO 43215 (614) 487-8770

BID DOCUMENTS
ONLY NOT FOR
CONSTRUCTION

COPYRIGHT 2026
ALL DRAWINGS AND SPECIFICATIONS SHALL
REMAIN THE PROPERTY OF RED ARCHITECTURE LLC
AND MAY NOT BE USED, DUPLICATED, OR ALTERED
WITHOUT WRITTEN CONSENT OF THE ARCHITECT.

ECP PARTNERS

CMG HIGHLAND CITY SHELL, FL
TBD US 98
LAKELAND, FL 33812

Issue Record:

02/25/26	PERMIT SET
02/25/26	BID SET

Revisions:

Drawn: JLH,PH
Checked: DM,DF

Project No.
EPL002

Contents:
SECTION DETAILS

A407

StoPowerwall® DrainScreen®
Horizontal Joint at Dissimilar Material

Detail No.: 64s.10
Date: March 2022

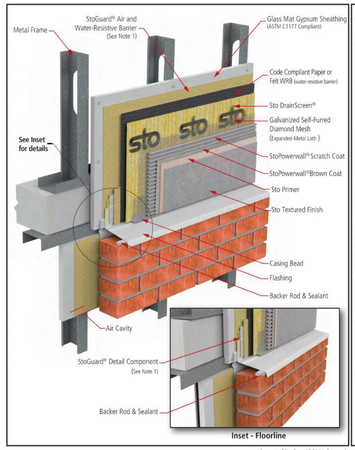

Notes:

1. Refer to StoGuard Product Use Chart (Table 1.1) for StoGuard detail components; joint treatment, rough opening protection, backing for masonry anchors, or transitions to dissimilar materials, joints and seams in construction.

2. Refer to General Notes for specific information and design guidance on wall assembly components.

3. Glass mat gypsum sheathing in compliance with ASTM C1177, exterior grade and Exposure 1 wood based sheathing, or cementitious sheathing in compliance with ASTM C1325.

4. Minimum 2.5 lb/yd² (1.4 kg/m²) self-furred galvanized diamond mesh metal lath.

5. Stucco scratch and brown coat material in compliance with ASTM C926 and manufactured or listed by Sto Corp.

6. Components not identified as Sto are furnished by other manufacturers and are not necessarily installed by trades who install the Sto products. Refer to project specific contract documents.

7. Attach assembly components above floorline joint to deep leg track. Attach assembly components below floor line joint to embedded track with sufficient distance from deep leg track to allow for unimpeded floorline deflection.

ATTENTION Property of Sto Corp. All Rights Reserved. www.stocorp.com

Sto products are intended for use by qualified professional contractors, not consumers, as a component of a larger construction assembly as specified by a qualified design professional, general contractor or builder. They should be installed in accordance with those specifications and Sto's instructions. Sto Corp. disclaims all, and assumes no, liability for on-site inspections, for its products applied improperly, or by unqualified persons or entities, or as part of an improperly designed or constructed building, for the nonperformance of adjacent building components or assemblies, of for other construction activities beyond Sto's control. Improper use of Sto products or use as part of an improperly designed or constructed larger assembly or building may result in serious damage to Sto products, and to the structure of the building or its components.

STO CORP. DISCLAIMS ALL WARRANTIES EXPRESSED OR IMPLIED EXCEPT FOR EXPLICIT LIMITED WRITTEN WARRANTIES ISSUED TO AND ACCEPTED BY BUILDING OWNERS IN ACCORDANCE WITH STO'S WARRANTY PROGRAMS WHICH ARE SUBJECT TO CHANGE FROM TIME TO TIME. For the fullest, most current information on proper application, clean-up, mixing and other specifications and warranties, cautions and disclaimers, please refer to the Sto Corp. website, www.stocorp.com.

7 A408 **STUCCO HORIZONTAL JOINT AT DISSIMILAR MATERIALS**
N.T.S.

StoPowerwall® DrainScreen®
Termination at Parapet

Detail No.: 64s.15
Date: March 2022

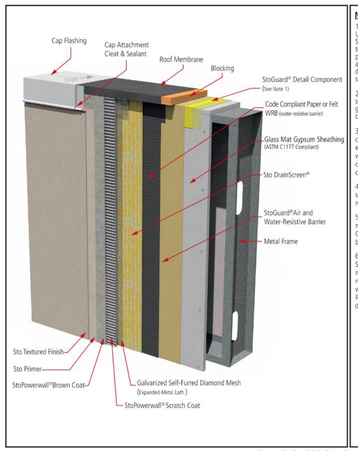

Notes:

1. Refer to StoGuard Product Use Chart (Table 1.1) for StoGuard detail components; joint treatment, rough opening protection, backing for masonry anchors, or transitions to dissimilar materials, joints and seams in construction.

2. Refer to General Notes for specific information and design guidance on wall assembly components.

3. Glass mat gypsum sheathing in compliance with ASTM C1177, exterior grade and Exposure 1 wood based sheathing, or cementitious sheathing in compliance with ASTM C1325.

4. Minimum 2.5 lb/yd² (1.4 kg/m²) self-furred galvanized diamond mesh metal lath.

5. Stucco scratch and brown coat material in compliance with ASTM C926 and manufactured or listed by Sto Corp.

6. Components not identified as Sto are furnished by other manufacturers and are not necessarily installed by trades who install the Sto products. Refer to project specific contract documents.

ATTENTION Property of Sto Corp. All Rights Reserved. www.stocorp.com

Sto products are intended for use by qualified professional contractors, not consumers, as a component of a larger construction assembly as specified by a qualified design professional, general contractor or builder. They should be installed in accordance with those specifications and Sto's instructions. Sto Corp. disclaims all, and assumes no, liability for on-site inspections, for its products applied improperly, or by unqualified persons or entities, or as part of an improperly designed or constructed building, for the nonperformance of adjacent building components or assemblies, of for other construction activities beyond Sto's control. Improper use of Sto products or use as part of an improperly designed or constructed larger assembly or building may result in serious damage to Sto products, and to the structure of the building or its components.

STO CORP. DISCLAIMS ALL WARRANTIES EXPRESSED OR IMPLIED EXCEPT FOR EXPLICIT LIMITED WRITTEN WARRANTIES ISSUED TO AND ACCEPTED BY BUILDING OWNERS IN ACCORDANCE WITH STO'S WARRANTY PROGRAMS WHICH ARE SUBJECT TO CHANGE FROM TIME TO TIME. For the fullest, most current information on proper application, clean-up, mixing and other specifications and warranties, cautions and disclaimers, please refer to the Sto Corp. website, www.stocorp.com.

6 A408 **STUCCO TERMINATION AT PARAPET**
N.T.S.

StoPowerwall® DrainScreen®
Outside Corner: Common Substrate

Detail No.: 64s.14
Date: March 2022

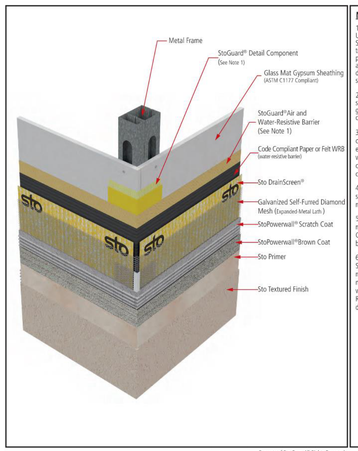

Notes:

1. Refer to StoGuard Product Use Chart (Table 1.1) for StoGuard detail components; joint treatment, rough opening protection, backing for masonry anchors, or transitions to dissimilar materials, joints and seams in construction.

2. Refer to General Notes for specific information and design guidance on wall assembly components.

3. Glass mat gypsum sheathing in compliance with ASTM C1177, exterior grade and Exposure 1 wood based sheathing, or cementitious sheathing in compliance with ASTM C1325.

4. Minimum 2.5 lb/yd² (1.4 kg/m²) self-furred galvanized diamond mesh metal lath.

5. Stucco scratch and brown coat material in compliance with ASTM C926 and manufactured or listed by Sto Corp.

6. Components not identified as Sto are furnished by other manufacturers and are not necessarily installed by trades who install the Sto products. Refer to project specific contract documents.

ATTENTION Property of Sto Corp. All Rights Reserved. www.stocorp.com

Sto products are intended for use by qualified professional contractors, not consumers, as a component of a larger construction assembly as specified by a qualified design professional, general contractor or builder. They should be installed in accordance with those specifications and Sto's instructions. Sto Corp. disclaims all, and assumes no, liability for on-site inspections, for its products applied improperly, or by unqualified persons or entities, or as part of an improperly designed or constructed building, for the nonperformance of adjacent building components or assemblies, of for other construction activities beyond Sto's control. Improper use of Sto products or use as part of an improperly designed or constructed larger assembly or building may result in serious damage to Sto products, and to the structure of the building or its components.

STO CORP. DISCLAIMS ALL WARRANTIES EXPRESSED OR IMPLIED EXCEPT FOR EXPLICIT LIMITED WRITTEN WARRANTIES ISSUED TO AND ACCEPTED BY BUILDING OWNERS IN ACCORDANCE WITH STO'S WARRANTY PROGRAMS WHICH ARE SUBJECT TO CHANGE FROM TIME TO TIME. For the fullest, most current information on proper application, clean-up, mixing and other specifications and warranties, cautions and disclaimers, please refer to the Sto Corp. website, www.stocorp.com.

5 A408 **STUCCO OUTSIDE CORNER**
N.T.S.

StoPowerwall® DrainScreen®
Vertical Joint at Dissimilar Material

Detail No.: 64s.11
Date: March 2022

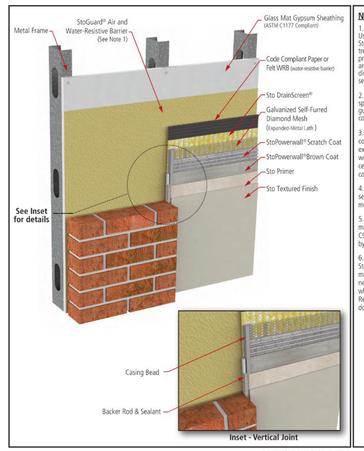

Notes:

1. Refer to StoGuard Product Use Chart (Table 1.1) for StoGuard detail components; joint treatment, rough opening protection, backing for masonry anchors, or transitions to dissimilar materials, joints and seams in construction.

2. Refer to General Notes for specific information and design guidance on wall assembly components.

3. Glass mat gypsum sheathing in compliance with ASTM C1177, exterior grade and Exposure 1 wood based sheathing, or cementitious sheathing in compliance with ASTM C1325.

4. Minimum 2.5 lb/yd² (1.4 kg/m²) self-furred galvanized diamond mesh metal lath.

5. Stucco scratch and brown coat material in compliance with ASTM C926 and manufactured or listed by Sto Corp.

6. Components not identified as Sto are furnished by other manufacturers and are not necessarily installed by trades who install the Sto products. Refer to project specific contract documents.

ATTENTION Property of Sto Corp. All Rights Reserved. www.stocorp.com

Sto products are intended for use by qualified professional contractors, not consumers, as a component of a larger construction assembly as specified by a qualified design professional, general contractor or builder. They should be installed in accordance with those specifications and Sto's instructions. Sto Corp. disclaims all, and assumes no, liability for on-site inspections, for its products applied improperly, or by unqualified persons or entities, or as part of an improperly designed or constructed building, for the nonperformance of adjacent building components or assemblies, of for other construction activities beyond Sto's control. Improper use of Sto products or use as part of an improperly designed or constructed larger assembly or building may result in serious damage to Sto products, and to the structure of the building or its components.

STO CORP. DISCLAIMS ALL WARRANTIES EXPRESSED OR IMPLIED EXCEPT FOR EXPLICIT LIMITED WRITTEN WARRANTIES ISSUED TO AND ACCEPTED BY BUILDING OWNERS IN ACCORDANCE WITH STO'S WARRANTY PROGRAMS WHICH ARE SUBJECT TO CHANGE FROM TIME TO TIME. For the fullest, most current information on proper application, clean-up, mixing and other specifications and warranties, cautions and disclaimers, please refer to the Sto Corp. website, www.stocorp.com.

4 A408 **STUCCO VERTICAL JOINT AT DISSIMILAR MATERIALS**
N.T.S.

StoPowerwall® DrainScreen®
Soffit Return

Detail No.: 64s.07
Date: March 2022

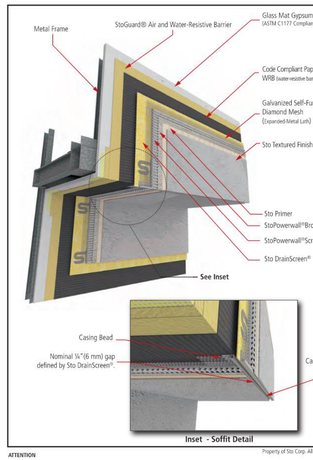

Notes:

1. Refer to StoGuard Product Use Chart (Table 1.1) for StoGuard detail components; joint treatment, rough opening protection, backing for masonry anchors, or transitions to dissimilar materials, joints and seams in construction.

2. Refer to General Notes for specific information and design guidance on wall assembly components.

3. Glass mat gypsum sheathing in compliance with ASTM C1177, exterior grade and Exposure 1 wood based sheathing, or cementitious sheathing in compliance with ASTM C1325.

4. Minimum 2.5 lb/yd² (1.4 kg/m²) self-furred galvanized diamond mesh metal lath.

5. Stucco scratch and brown coat material in compliance with ASTM C926 and manufactured or listed by Sto Corp.

6. Components not identified as Sto are furnished by other manufacturers and are not necessarily installed by trades who install the Sto products. Refer to project specific contract documents.

ATTENTION Property of Sto Corp. All Rights Reserved. www.stocorp.com

Sto products are intended for use by qualified professional contractors, not consumers, as a component of a larger construction assembly as specified by a qualified design professional, general contractor or builder. They should be installed in accordance with those specifications and Sto's instructions. Sto Corp. disclaims all, and assumes no, liability for on-site inspections, for its products applied improperly, or by unqualified persons or entities, or as part of an improperly designed or constructed building, for the nonperformance of adjacent building components or assemblies, of for other construction activities beyond Sto's control. Improper use of Sto products or use as part of an improperly designed or constructed larger assembly or building may result in serious damage to Sto products, and to the structure of the building or its components.

STO CORP. DISCLAIMS ALL WARRANTIES EXPRESSED OR IMPLIED EXCEPT FOR EXPLICIT LIMITED WRITTEN WARRANTIES ISSUED TO AND ACCEPTED BY BUILDING OWNERS IN ACCORDANCE WITH STO'S WARRANTY PROGRAMS WHICH ARE SUBJECT TO CHANGE FROM TIME TO TIME. For the fullest, most current information on proper application, clean-up, mixing and other specifications and warranties, cautions and disclaimers, please refer to the Sto Corp. website, www.stocorp.com.

3 A408 **STUCCO SOFFIT RETURN**
N.T.S.

StoPowerwall® DrainScreen®
Termination at Grade: Sheathing Flush with Foundation

Detail No.: 64s.02
Date: March 2022

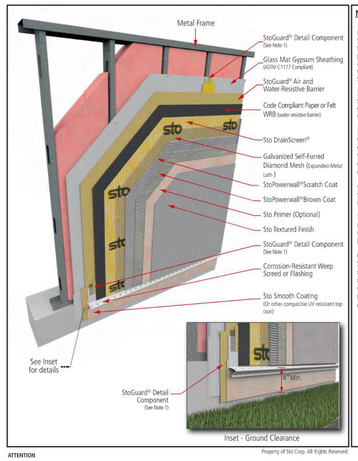

Notes:

1. Refer to StoGuard Product Use Chart (Table 1.1) for StoGuard detail components; joint treatment, rough opening protection, backing for masonry anchors, or transitions to dissimilar materials, joints and seams in construction.

2. Refer to General Notes for specific information and design guidance on wall assembly components.

3. Glass mat gypsum sheathing in compliance with ASTM C1177, exterior grade and Exposure 1 wood based sheathing, or cementitious sheathing in compliance with ASTM C1325.

4. Minimum 2.5 lb/yd² (1.4 kg/m²) self-furred galvanized diamond mesh metal lath.

5. Stucco scratch and brown coat material in compliance with ASTM C926 and manufactured or listed by Sto Corp.

6. Components not identified as Sto are furnished by other manufacturers and are not necessarily installed by trades who install the Sto products. Refer to project specific contract documents.

ATTENTION Property of Sto Corp. All Rights Reserved. www.stocorp.com

Sto products are intended for use by qualified professional contractors, not consumers, as a component of a larger construction assembly as specified by a qualified design professional, general contractor or builder. They should be installed in accordance with those specifications and Sto's instructions. Sto Corp. disclaims all, and assumes no, liability for on-site inspections, for its products applied improperly, or by unqualified persons or entities, or as part of an improperly designed or constructed building, for the nonperformance of adjacent building components or assemblies, of for other construction activities beyond Sto's control. Improper use of Sto products or use as part of an improperly designed or constructed larger assembly or building may result in serious damage to Sto products, and to the structure of the building or its components.

STO CORP. DISCLAIMS ALL WARRANTIES EXPRESSED OR IMPLIED EXCEPT FOR EXPLICIT LIMITED WRITTEN WARRANTIES ISSUED TO AND ACCEPTED BY BUILDING OWNERS IN ACCORDANCE WITH STO'S WARRANTY PROGRAMS WHICH ARE SUBJECT TO CHANGE FROM TIME TO TIME. For the fullest, most current information on proper application, clean-up, mixing and other specifications and warranties, cautions and disclaimers, please refer to the Sto Corp. website, www.stocorp.com.

2 A408 **STUCCO TERMINATION AT GRADE**
N.T.S.

StoPowerwall® DrainScreen®
System Components

Detail No.: 64s.00
Date: March 2022

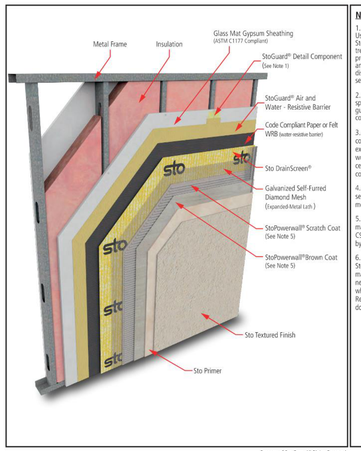

Notes:

1. Refer to StoGuard Product Use Chart (Table 1.1) for StoGuard detail components; joint treatment, rough opening protection, backing for masonry anchors, or transitions to dissimilar materials, joints and seams in construction.

2. Refer to General Notes for specific information and design guidance on wall assembly components.

3. Glass mat gypsum sheathing in compliance with ASTM C1177, exterior grade and Exposure 1 wood based sheathing, or cementitious sheathing in compliance with ASTM C1325.

4. Minimum 2.5 lb/yd² (1.4 kg/m²) self-furred galvanized diamond mesh metal lath.

5. Stucco scratch and brown coat material in compliance with ASTM C926 and manufactured or listed by Sto Corp.

6. Components not identified as Sto are furnished by other manufacturers and are not necessarily installed by trades who install the Sto products. Refer to project specific contract documents.

ATTENTION Property of Sto Corp. All Rights Reserved. www.stocorp.com

Sto products are intended for use by qualified professional contractors, not consumers, as a component of a larger construction assembly as specified by a qualified design professional, general contractor or builder. They should be installed in accordance with those specifications and Sto's instructions. Sto Corp. disclaims all, and assumes no, liability for on-site inspections, for its products applied improperly, or by unqualified persons or entities, or as part of an improperly designed or constructed building, for the nonperformance of adjacent building components or assemblies, of for other construction activities beyond Sto's control. Improper use of Sto products or use as part of an improperly designed or constructed larger assembly or building may result in serious damage to Sto products, and to the structure of the building or its components.

STO CORP. DISCLAIMS ALL WARRANTIES EXPRESSED OR IMPLIED EXCEPT FOR EXPLICIT LIMITED WRITTEN WARRANTIES ISSUED TO AND ACCEPTED BY BUILDING OWNERS IN ACCORDANCE WITH STO'S WARRANTY PROGRAMS WHICH ARE SUBJECT TO CHANGE FROM TIME TO TIME. For the fullest, most current information on proper application, clean-up, mixing and other specifications and warranties, cautions and disclaimers, please refer to the Sto Corp. website, www.stocorp.com.

1 A408 **STUCCO SYSTEM COMPONENTS**
N.T.S.

ATTENTION WWW.STOCORP.COM

Sto products are intended for use by qualified professional contractors, not consumers, as a component of a larger construction assembly as specified by a qualified design professional, general contractor or builder. They should be installed in accordance with those specifications and Sto's instructions. Sto Corp. disclaims all, and assumes no, liability for on-site inspections, for its products applied improperly, or by unqualified persons or entities, or as part of an improperly designed or constructed building, for the nonperformance of adjacent building components or assemblies, of for other construction activities beyond Sto's control. Improper use of Sto products or use as part of an improperly designed or constructed larger assembly or building may result in serious damage to Sto products, and to the structure of the building or its components. STO CORP. DISCLAIMS ALL WARRANTIES EXPRESSED OR IMPLIED EXCEPT FOR EXPLICIT LIMITED WRITTEN WARRANTIES ISSUED TO AND ACCEPTED BY BUILDING OWNERS IN ACCORDANCE WITH STO'S WARRANTY PROGRAMS WHICH ARE SUBJECT TO CHANGE FROM TIME TO TIME. For the fullest, most current information on proper application, clean-up, mixing and other specifications and warranties, cautions and disclaimers, please refer to the Sto Corp. website, www.stocorp.com.

Sto details are illustrations of construction for the Stucco. They are guidelines to assist in developing project specific details for the finish system. Components noted in the details outside of the Stucco will vary within projects. Refer to construction set for wall system and building details. Refer to the appropriate Sto specification for Stucco design requirements. And refer to local building code for any special requirements.

Consultant:
Red Architecture
589 W. NATIONWIDE BLVD. SUITE B
COLUMBUS, OHIO 43215 (614) 487-8770

BID DOCUMENTS
ONLY NOT FOR
CONSTRUCTION

COPYRIGHT 2026
ALL DRAWINGS AND SPECIFICATIONS SHALL REMAIN THE PROPERTY OF RED ARCHITECTURE LLC AND MAY NOT BE USED, DUPLICATED, OR ALTERED WITHOUT WRITTEN CONSENT OF THE ARCHITECT.

ECP PARTNERS

CMG HIGHLAND CITY SHELL, FL
TBD US 98
LAKELAND, FL 33812

Issue Record:

02/25/26	PERMIT SET
02/25/26	BID SET

Revisions:

Drawn: JLH,PH
Checked: DM,DF

Project No. EPL002

Contents: STUCCO DETAILS

A408

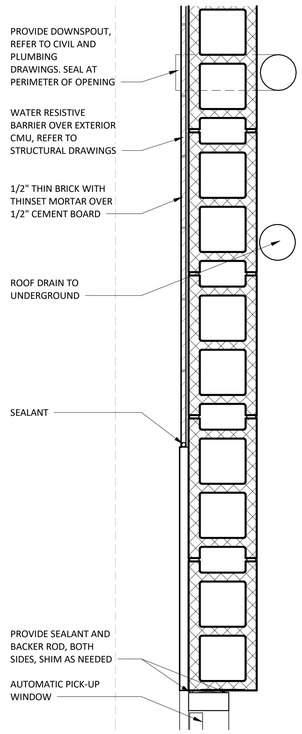

6 A409 **PLAN DETAIL**
1 1/2" = 1'-0"

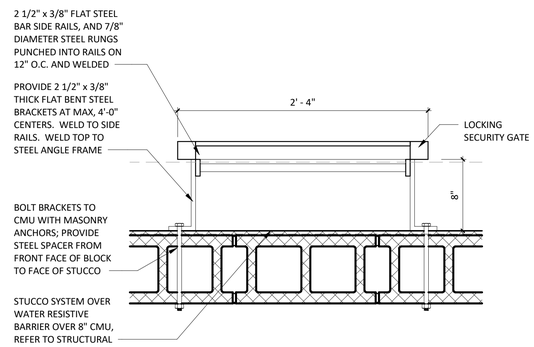

8 A409 **PLAN DETAIL - EXTERIOR ROOF LADDER**
1 1/2" = 1'-0"

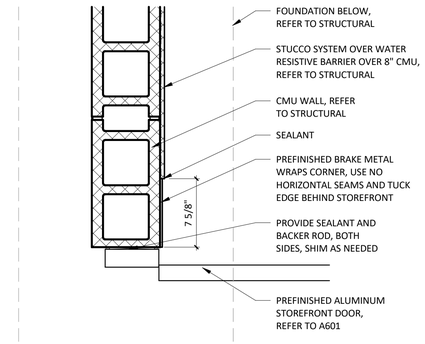

7 A409 **PLAN DETAIL**
1 1/2" = 1'-0"

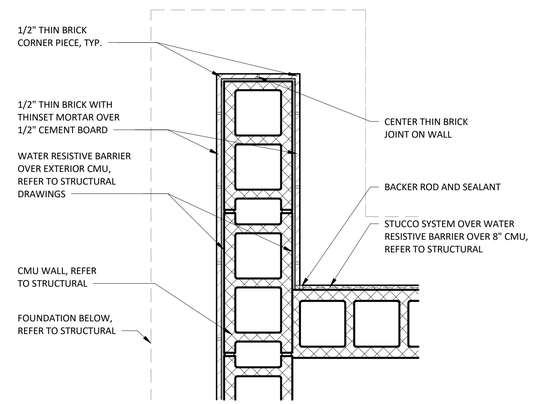

5 A409 **PLAN DETAIL - BRICK ENDWALL**
1 1/2" = 1'-0"

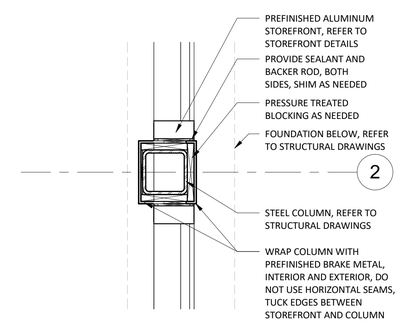

4 A409 **PLAN DETAIL**
1 1/2" = 1'-0"

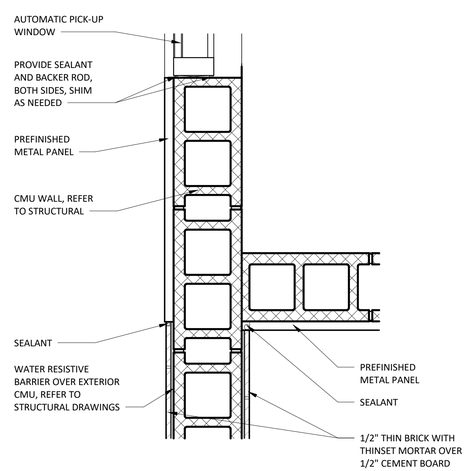

3 A409 **PLAN DETAIL**
1 1/2" = 1'-0"

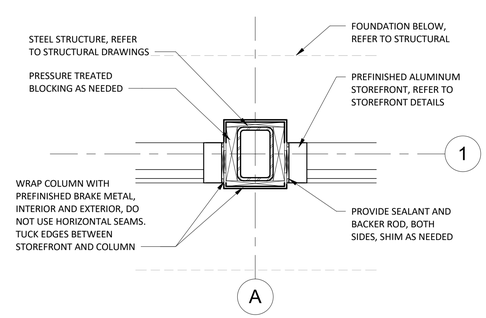

2 A409 **PLAN DETAIL**
1 1/2" = 1'-0"

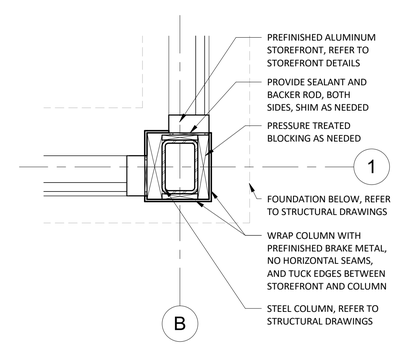

1 A409 **PLAN DETAIL**
1 1/2" = 1'-0"

Consultant:
R/A
Red Architecture
589 W. NATIONWIDE BLVD. SUITE B
COLUMBUS, OHIO 43215 (614) 487-8770

BID DOCUMENTS ONLY NOT FOR CONSTRUCTION

COPYRIGHT 2026
ALL DRAWINGS AND SPECIFICATIONS SHALL REMAIN THE PROPERTY OF RED ARCHITECTURE LLC AND MAY NOT BE USED, DUPLICATED, OR ALTERED WITHOUT WRITTEN CONSENT OF THE ARCHITECT.

ECP PARTNERS

CMG HIGHLAND CITY SHELL, FL
TBD US 98
LAKELAND, FL 33812

Issue Record:

02/25/26	PERMIT SET
02/25/26	BID SET

Revisions:

Drawn: JLH,PH
Checked: DM,DF

Project No. EPL002

Contents:

PLAN DETAILS

A409

DOOR SCHEDULE

TAG	DOOR STATUS *	FRAME STATUS	DOOR DESCRIPTION	DOOR WIDTH	DOOR HEIGHT	DOOR THICKNESS	DOOR TYPE	DOOR FINISH	FRAME FRAME TYPE	FRAME MATERIAL	STILE	HARDWARE SET	HARDWARE STATUS*	FIRE RATING	REMARKS
1	NEW	NEW	DOUBLE STOREFRONT (WIDE STILE, NON-OFFSET, PANIC)	6' - 0"	7' - 0"	0' - 1 3/4"	A	SEE A301	STOREFRONT	ALUM	WIDE (5")	1A	NEW		1,2,4,5
2	NEW	NEW	SINGLE STOREFRONT (WIDE STILE, NON-OFFSET, PANIC)	3' - 0"	7' - 0"	0' - 1 3/4"	A	SEE A301	STOREFRONT	ALUM	WIDE (5")	2A	NEW		1,3,4,5
3	NEW	NEW	HM REAR KITCHEN (STANDARD)	3' - 6"	7' - 0"	0' - 1 3/4"	B	D1 (SEE A120)	1	H.M.	-	3	NEW		1,4,6

REMARK NOTES

1. DOORS WITH REMARK #1 TO BE KEYED THE SAME
2. EXIT INDICATOR ARRIVES WITH SIGNS STATING "THIS DOOR TO REMAIN UNLOCKED DURING BUSINESS HOURS" AND "THIS DOOR TO REMAIN UNLOCKED WHEN THE BUILDING IS OCCUPIED". VERIFY REQUIRED SIGN WORDING WITH LOCAL JURISDICTION PRIOR TO INSTALLATION. ONE SIGN IS TO BE PLACED IN A VISIBLE LOCATION ABOVE THE DOORS.
3. THERE IS TO BE NO EXTERIOR HOLE OR CYLINDER
4. USE NON-SHRINK STRUCTURAL GROUT BED UNDER THRESHOLD
5. BLACK DOOR SWEEP TO BE USED WITH CHARCOAL, BLACK OR BRONZE STOREFRONT. LIGHT GRAY DOOR SWEEP TO BE USED WITH CLEAR ANODIZED ALUMINUM STOREFRONT
6. REAR KITCHEN DOOR TO BE PAINTED 'BLACK' U.N.O.

HARDWARE SETS

SET 1A - MAIN ENTRY - PAIR - PUSH BAR		
(2)	HINGE	HAGER, MODEL 780-224HD-83"-CLR
(2)	MORTISE CYLINDER	SCHLAGE, MODEL 80-103, BRUSHED CHROME; C.O. CYLINDER AT 34" MIN. FROM BOTTOM OF DOOR
(2)	TEMP CORE	SCHLAGE, MODEL 80-035 INTERCHANGEABLE CORE, (BRUSHED CHROME)
(2)	PUSH/PULL	HAGER, MODEL 150 US32D (36" BAR LENGTH, C.O. BAR AT 38" FROM BOTTOM OF DOOR), CENTER PULL ON DOOR STILE
	HARDWARE	
(1)	DEADBOLT	ADAMS RITE, MODEL MS1850S-310-628
(1)	EXIT INDICATOR	ADAMS RITE, MODEL 4089-00-130
(1)	HEADER BOLT	ADAMS RITE, MODEL 4016-30-01
(1)	THRESHOLD BOLT	ADAMS RITE, MODEL 4015-18-1B
(2)	CLOSER	DORMA, MODEL 8916-AF89P-689 (TOP JAMB), (ALUMINUM)
(2)	DOOR STOP	IVES, MODEL FS18S (ALUMINUM), MOUNT 4" MAX. FROM WALL
(2)	OVERHEAD STOP	GLYNN-JOHNSON, MODEL 454S-SP28 (ALUMINUM)
(2)	CLOSER BACK PLATE	DORMA, MODEL BP89, ALUMINUM
(1)	THRESHOLD	REESE, MODEL S239A-72 (SIZE 72")
(2)	SMOKE SEAL	REESE, MODEL 797B-21
(2)	DOOR SWEEP	PEMKO, MODEL SFSC-200-36 (36" DOOR),OWNER FURNISHED

SET 2A - ENTRY - SINGLE - EGRESS ONLY - PANIC HARDWARE		
(1)	HINGE	HAGER, MODEL 780-224HD-83"-CLR
(1)	PUSH HARDWARE	ADAMS RITE, MODEL 8801-36-628 (ALUMINUM FINISH, 36" DOOR); C.O. EXIT DEVICE AT 38" FROM BOTTOM OF DOOR
(1)	CLOSER	DORMA, MODEL 8916-AF89P-689 (TOP JAMB), (ALUMINUM)
(1)	CLOSER BACK PLATE	DORMA, MODEL BP89, ALUMINUM
(1)	OVERHEAD STOP	GLYNN-JOHNSON, MODEL 454S-US32D (ALUMINUM)
(1)	THRESHOLD	REESE, MODEL S239A-36 (SIZE 36")
(1)	SMOKE SEAL	REESE, MODEL 797B-21
(1)	DOOR SWEEP	PEMKO, MODEL SFSC-200-36 (36" DOOR), OWNER FURNISHED
(1)	DOOR STOP	IVES, MODEL FS18S (ALUMINUM), MOUNT 4" MAX. FROM WALL

SET 3 - REAR EXIT - SINGLE		
(1)	HINGE	HAGER, MODEL 780-224HD-83"-CLR
(1)	PUSH HARDWARE	FALCON, MODEL 25-R-EO-4'-US28 (SIZE 42")
(1)	PULL HARDWARE	FALCON, MODEL 510L-DANE-LHR-US26D, ALUMINUM (EXTERIOR SIDE)
(1)	RIM CYLINDER	GLS, MODEL RCIC-7-LZ-626
(1)	TEMP CORE	SCHLAGE, MODEL 80-035 INTERCHANGEABLE CORE (FINISH: BRUSHED CHROME)
(1)	CLOSER	DORMA, MODEL 8916-AF89P-689 (TOP JAMB), ALUMINUM
(1)	CLOSER BACK PLATE	DORMA, MODEL BP89, ALUMINUM
(1)	THRESHOLD	REESE, MODEL S239A-42, (SIZE 42")
(1)	WEATHERSTRIP	REESE, MODEL DS75C-4070
(1)	DOOR SWEEP	PEMKO, MODEL SFSC-200-42 (42" DOOR) (BLACK) OWNER FURNISHED
(1)	DOOR VIEWER	IVES, MODEL U698B26D, C.O. VIEWER AT 60" FROM BOTTOM OF DOOR
(1)	DOOR SILENCERS	IVES, MODEL SR64
(1)	DOOR BUTTON	HEATHZENITH MODEL SL-704, OR EQUAL
(1)	DOOR BUZZER	HEATHZENITH MODEL SL-170, OR EQUAL
(1)	KICKPLATE	HIAWATHA, MODEL KP834-US32D

DOOR NOTES

1. ALL EGRESS DOORS SHALL BE READILY OPENABLE FROM THE EGRESS SIDE WITHOUT THE USE OF A KEY OR SPECIAL KNOWLEDGE OR EFFORT.
2. LATCHES, HANDLES, PANIC BARS AND ALL DOOR HARDWARE WILL COMPLY WITH SECTION 7.2 OF NFPA 101 PER THE SPECIFICATIONS.
3. THE MANAGER HAS A KEY TO UNLOCK RESTROOM DOORS, FROM THE OUTSIDE IN CASE OF AN EMERGENCY.
4. ALL DOORS TO REMAIN UNLOCKED DURING BUSINESS HOURS.
5. SEE THIS SHEET FOR EXTERIOR DOOR SIGNAGE INFO.
6. MAXIMUM EFFORT TO OPERATE EXTERIOR OR INTERIOR DOORS WITH CLOSERS SHALL NOT EXCEED 5 POUNDS. THIS MAY BE INCREASED TO 15 POUNDS FOR FIRE-RATED DOORS.
7. ALL FRAMES, DOORS AND HARDWARE TO BE FURNISHED AND INSTALLED BY G.C. STOREFRONT DOORS AND HARDWARE TO BE FURNISHED AND INSTALLED BY G.C.
8. THE BOTTOM 10 INCHES OF ALL DOORS SHALL HAVE A SMOOTH, UNINTERRUPTED SURFACE TO ALLOW THE DOOR TO BE OPENED BY A WHEELCHAIR FOOTREST WITHOUT CREATING A TRAP OR HAZARDOUS CONDITION.
9. ALL SUPPORT SIGNAGE PROVIDED BY TENANT'S SUPPORT SIGNAGE SUPPLIER.
10. ALL SUPPORT SIGNAGE INSTALLED BY G.C.
11. ALL HARDWARE SHALL MATCH STOREFRONT, VERIFY WITH ARCHITECT PRIOR TO ORDERING
12. GC SHALL INSTALL OVERHEAD STOP PRIOR TO INSTALLING THE FLOOR MOUNTED STOP AT DOORS WHERE BOTH ARE PRESENT.

DOOR TYPES

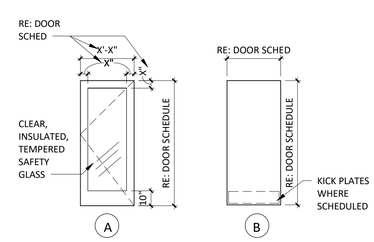

ALUMINUM DOOR W/ TEMPERED GLAZING

INSULATED HOLLOW METAL DOOR

DOOR FRAMES

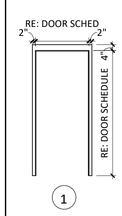

NOTE: GC TO VERIFY THE WALL THICKNESS PRIOR TO ORDERING DOOR FRAMES.

DOOR CLOSER

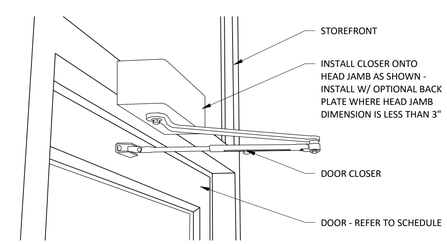

TOP JAMB MOUNT INSTALLATION. (NOTE THAT BACKPLATE IS MISSING IN THIS INSTALLATION BECAUSE HEAD JAMB IS OF ADEQUATE HEIGHT TO RECEIVE ALL MOUNTING SCREWS WITHOUT IT.) WHEN IN DOUBT ABOUT THE HEAD JAMB DIMENSION OR STABILITY, ORDER THE BACKPLATE.

Consultant:

R/A
Red Architecture
589 W. NATIONWIDE BLVD. SUITE B
COLUMBUS, OHIO 43215 (614) 487-8770

BID DOCUMENTS ONLY NOT FOR CONSTRUCTION

COPYRIGHT 2026
ALL DRAWINGS AND SPECIFICATIONS SHALL REMAIN THE PROPERTY OF RED ARCHITECTURE LLC AND MAY NOT BE USED, DUPLICATED, OR ALTERED WITHOUT WRITTEN CONSENT OF THE ARCHITECT.

ECP PARTNERS

CMG HIGHLAND CITY SHELL, FL
TBD US 98
LAKELAND, FL 33812

Issue Record:

02/25/26	PERMIT SET
02/25/26	BID SET

Revisions:

Drawn: JLH,PH

Checked: DM,DF

Project No. EPL002

Contents:

DOOR & HARDWARE SCHEDULE

A601

STOREFRONT DETAILS

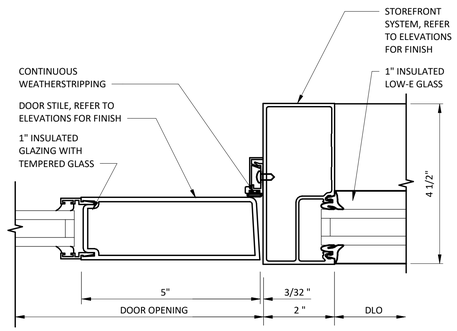

9 A602 **STOREFRONT DOOR JAMB DETAIL**
6" = 1'-0"

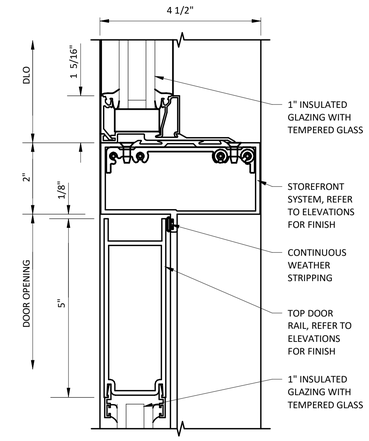

8 A602 **STOREFRONT TRANSOM BAR DETAIL**
6" = 1'-0"

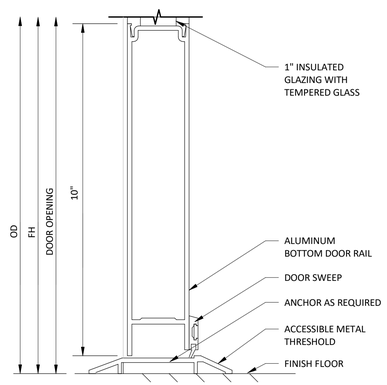

7 A602 **STOREFRONT THRESHOLD DETAIL**
6" = 1'-0"

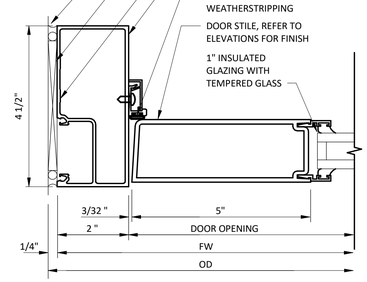

6 A602 **STOREFRONT DOOR JAMB DETAIL**
6" = 1'-0"

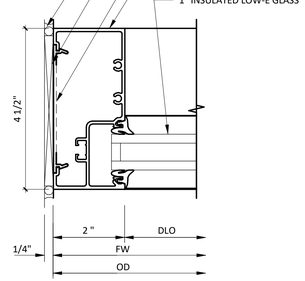

5 A602 **STOREFRONT JAMB DETAIL**
6" = 1'-0"

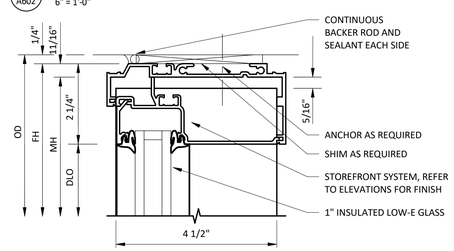

4 A602 **STOREFRONT HEAD DETAIL**
6" = 1'-0"

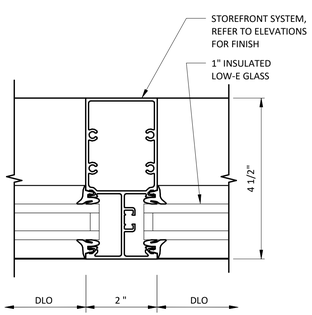

3 A602 **STOREFRONT MULLION DETAIL**
6" = 1'-0"

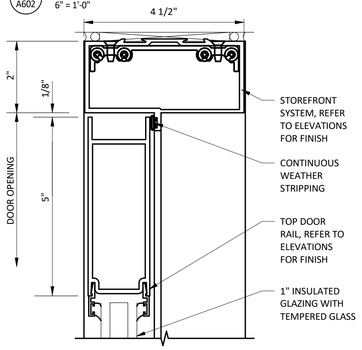

2 A602 **STOREFRONT TRANSOM BAR DETAIL**
6" = 1'-0"

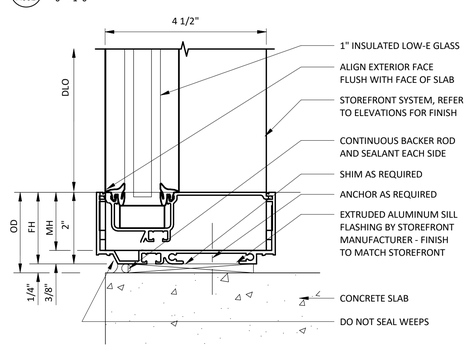

1 A602 **STOREFRONT SILL DETAIL**
6" = 1'-0"

GENERAL NOTES

1. ALL WINDOW AND DOOR GLAZING IS TO BE CLEAR / INSULATED UNLESS NOTED OTHERWISE.
2. WINDOW AND DOOR GLAZING TO BE TEMPERED AT LOCATIONS INDICATED WITH "*".
3. NEW STOREFRONT FRAMING SYSTEM TO BE SUPPLIED BY G.C. G.C. TO VERIFY FRAMING OPENING SIZES AND MATERIALS WITH ARCHITECT AND/OR TENANT CONSTRUCTION MANAGER PRIOR TO FABRICATION.
4. STOREFRONT GLAZING DESIGN IS BASED ON KAWNEER PREFINISHED ALUMINUM STOREFRONT WITH 1" INSULATED GLAZING, REFER TO SPECIFICATIONS.
5. STOREFRONT SYSTEM IS 2" x 4 1/2" NOMINAL DIMENSION; FRONT SET, U.N.O.

STOREFRONT TYPES

NOTE: ALL VIEWS FROM THE EXTERIOR

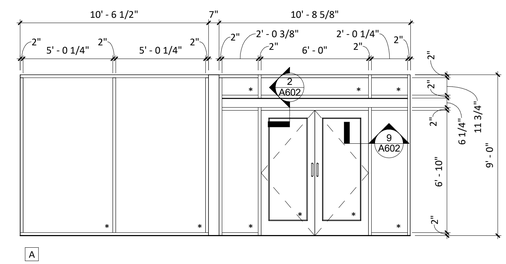

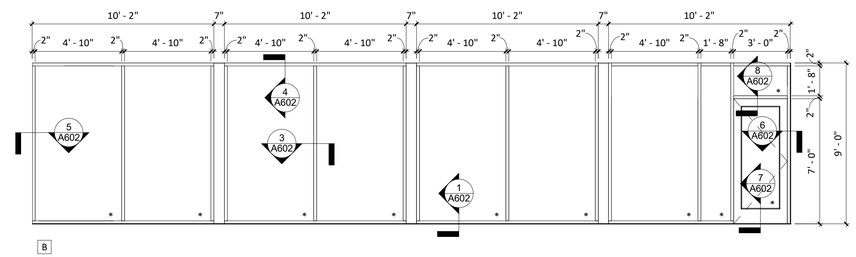

WINDOW TYPES

NOTE: ALL VIEWS FROM THE EXTERIOR

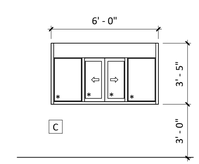

NOTE:
FULLY AUTOMATIC ELECTRIC PASS-THRU WINDOW BASED UPON QUIKSERV IMPACT RESISTANT WINDOW DESIGN.

Consultant:
R/A
Red Architecture
589 W. NATIONWIDE BLVD. SUITE B
COLUMBUS, OHIO 43215 (614) 487-8770

BID DOCUMENTS ONLY NOT FOR CONSTRUCTION

COPYRIGHT 2026
ALL DRAWINGS AND SPECIFICATIONS SHALL REMAIN THE PROPERTY OF RED ARCHITECTURE LLC AND MAY NOT BE USED, DUPLICATED, OR ALTERED WITHOUT WRITTEN CONSENT OF THE ARCHITECT.

ECP PARTNERS

CMG HIGHLAND CITY SHELL, FL
TBD US 98
LAKELAND, FL 33812

Issue Record:

02/25/26	PERMIT SET
02/25/26	BID SET

Revisions:

Drawn: JLH,PH
Checked: DM,DF

Project No. EPL002

Contents: STOREFRONT DETAILS

A602

4 A901 **EXTERIOR PERSPECTIVE**

3 A901 **EXTERIOR PERSPECTIVE**

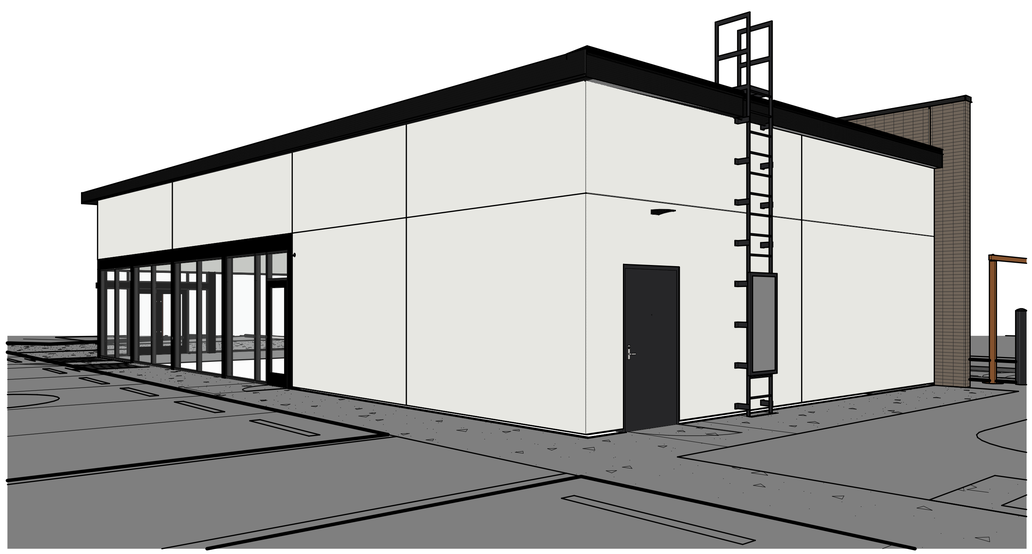

2 A901 **EXTERIOR PERSPECTIVE**

1 A901 **EXTERIOR PERSPECTIVE**

Consultant:

R/A

Red Architecture

589 W. NATIONWIDE BLVD. SUITE B
COLUMBUS, OHIO 43215 (614) 487-8770

BID DOCUMENTS ONLY NOT FOR CONSTRUCTION

COPYRIGHT 2026
ALL DRAWINGS AND SPECIFICATIONS SHALL REMAIN THE PROPERTY OF RED ARCHITECTURE LLC AND MAY NOT BE USED, DUPLICATED, OR ALTERED WITHOUT WRITTEN CONSENT OF THE ARCHITECT.

ECP PARTNERS

CMG HIGHLAND CITY SHELL, FL
TBD US 98
LAKELAND, FL 33812

Issue Record:

02/25/26	PERMIT SET
02/25/26	BID SET

Revisions:

Drawn: JLH,PH

Checked: DM,DF

Project No. EPL002

Contents:

EXTERIOR PERSPECTIVES

A901

GENERAL STRUCTURAL NOTES

GENERAL

1. THE STRUCTURE IS DESIGNED TO BE SELF-SUPPORTING AND STABLE AFTER THE CONSTRUCTION IS FULLY COMPLETED. IT IS SOLELY THE CONTRACTOR'S RESPONSIBILITY TO DETERMINE CONSTRUCTION PROCEDURE AND SEQUENCE AND TO ENSURE THE SAFETY OF THE BUILDING AND ITS COMPONENT PARTS DURING ERECTION. THIS INCLUDES THE ADDITION OF WHATEVER SHORING, SHEETING, TEMPORARY BRACING, GUYS, OR TIEDOWNS WHICH MIGHT BE NECESSARY. SUCH MATERIAL IS TO REMAIN THE CONTRACTOR'S PROPERTY AFTER COMPLETION OF THE PROJECT.

2. IT IS SOLELY THE CONTRACTOR'S RESPONSIBILITY TO FOLLOW ALL APPLICABLE SAFETY CODES AND REGULATIONS DURING ALL PHASES OF CONSTRUCTION.

3. MECHANICAL EQUIPMENT LOADS, OPENINGS AND STRUCTURE IN ANY WAY RELATED TO MECHANICAL REQUIREMENTS ARE SHOWN FOR BIDDING PURPOSES ONLY. CONTRACTOR IS TO OBTAIN APPROVAL OF MECHANICAL AND OTHER TRADES BEFORE PROCEEDING WITH SUCH PORTION OF THE WORK. EXCESS COST RELATED TO VARIATION IN MECHANICAL REQUIREMENTS TO BE BORNE BY MECHANICAL CONTRACTOR.

4. DO NOT SCALE THE DRAWINGS WHERE DIMENSIONS ARE NOT SPECIFICALLY GIVEN. SEE ARCHITECTURAL DRAWINGS FOR DIMENSIONS AND ELEVATIONS NOT SHOWN. COORDINATE ALL DIMENSIONS AND ELEVATIONS WITH THE ARCHITECTURAL DRAWINGS. ALL DIMENSIONS AND ELEVATIONS SHOWN ON THE STRUCTURAL DRAWINGS ARE NOT INTENDED TO AUGMENT, NOR SUPERSEDE THOSE SHOWN ON THE ARCHITECTURAL DRAWINGS.

5. FIELD VERIFY ALL DIMENSIONS AND CONDITIONS PRIOR TO CONSTRUCTION. NOTIFY THE ARCHITECT IMMEDIATELY WHERE CONFLICTS EXIST WITHIN THE DRAWINGS OR BETWEEN THE DRAWINGS AND FIELD CONDITIONS.

6. THROUGHOUT THESE PLANS, THE TERM "PROVIDE" IS DEFINED AS "SUPPLY AND INSTALL".

7. SHOP DRAWINGS ARE TO BE SUBMITTED BY COMPLETE ERECTION PHASE OR SEQUENCE. LIMITS OF EACH INDIVIDUAL ERECTION PHASE OR SEQUENCE ARE TO BE CLEARLY INDICATED ON THE PLANS. INCOMPLETE OR PIECEMEAL SHOP DRAWINGS WILL BE RETURNED PRIOR TO REVIEW. RESUBMITTALS ARE TO HAVE REVISIONS CLEARLY MARKED OR IDENTIFIED. THE CONTRACTOR SHALL REVIEW AND ACCEPT FULL RESPONSIBILITY FOR DIMENSIONAL CORRECTNESS. ALL SHOP DRAWINGS MUST BEAR THE APPROVAL STAMP OF THE CONTRACTOR PRIOR TO REVIEW BY THE ARCHITECT OR ENGINEER.

8. SHOULD ANY OF THE DETAILED INSTRUCTIONS SHOWN ON THE PLANS CONFLICT WITH THE GENERAL STRUCTURAL NOTES, THE SPECIFICATIONS OR WITH EACH OTHER, THE STRICTEST PROVISION WILL GOVERN.

9. CODE INFORMATION

- GOVERNING CODE:	2023 FLORIDA BUILDING CODE — 8th AMMEDMENT	
- BUILDING RISK CATEGORY:	CATEGORY II	
LOADING TYPE:	UNIFORM (PSF)	CONCENTRATED (LB)
FLOOR LIVE LOADS (WITH ALLOWABLE REDUCTIONS WHERE APPLICABLE):		
- RESTAURANT	100 PSF	1,000 LB
ROOF LIVE LOADS:		
- ORDINARY FLAT, PITCHED, AND CURVED ROOFS	20 PSF	--
ROOF RAIN LOADS:	PRIMARY	SECONDARY
- RAIN INTENSITY (i)	3.96 IN/HR	7.53 IN/HR
WIND LOADS:		
- BASIC WIND SPEED (V)	140 MPH	
- BASIC ALLOWABLE WIND SPEED (V asd)	109 MPH	
- SITE EXPOSURE CATEGORY	C	
- INTERNAL PRESSURE COEFFICIENT	+/- 0.18	
- COMPONENT & CLADDING LOADS	REFER TO C&C CHART PROVIDED	
SEISMIC LOADS:		
- SEISMIC IMPORTANCE FACTOR (Ie)	1.0	
- MAPPED SPECTRAL RESPONSE ACCELERATION (Ss)	0.056	
- MAPPED SPECTRAL RESPONSE ACCELERATION (S1)	0.031	
- SEISMIC SITE CLASS	D	
- DESIGN SPECTRAL RESPONSE ACCELERATION (Sds)	0.060	
- DESIGN SPECTRAL RESPONSE ACCELERATION (Sd1)	0.050	
- SEISMIC DESIGN CATEGORY	A	
- RESPONSE MODIFICATION COEFFICIENT (R)	1.5	
- SEISMIC RESPONSE COEFFICIENT (Cs)	0.010	
- SEISMIC DESIGN BASE SHEAR (V)	1.50 K	
- ANALYSIS PROCEDURE	EQUIVALENT LATERAL FORCE	
- BASIC SEISMIC FORCE-RESISTING SYSTEM:	ORDINARY REINFORCED MASONRY WALLS	
SPECIAL LOADS		
- INTERIOR WALLS & PARTITIONS	5 PSF HORIZONTAL (ALLOWABLE)	
- HANDRAIL LOADS (ANY DIRECTION)	50 PLF	200 LB
GEOTECHNICAL:		
- GEOTECHNICAL ENGINEER:	UES PROFESSIONAL SOLUTIONS, LLC	
- REFERENCE REPORT I.D. OR NUMBER:	2152228v2	
- REFERENCE REPORT DATE:	07/10/2025	
- ALLOWABLE DESIGN BEARING PRESSURE:	2,500 PSF	
- FOUNDATION TYPE:	SHALLOW SPREAD FOOTING	

DELEGATED DESIGN ITEMS

1. PREFABRICATED ITEMS SHOWN ON THE STRUCTURAL DRAWINGS ARE REFERENCED FOR GENERAL COORDINATION PURPOSES ONLY. THESE SYSTEMS SHALL BE DESIGNED, FURNISHED, AND INSTALLED AS REQUIRED BY OTHER PORTIONS OF THE CONTRACT DOCUMENTS. JEZERINAC GEERS WILL REVIEW THE DESIGN METHODOLOGY, LOADS, AND INSTALLATION DETAILS AS PART OF THE SHOP DRAWING REVIEW PROCESS AND MAY REQUEST A SEALED CALCULATION PACKAGE FOR REVIEW. SHOP DRAWINGS SHALL BE SIGNED AND SEALED BY THE ENGINEER RESPONSIBLE FOR THE DESIGN OF THE DESIGNED ITEMS. DELEGATED DESIGN ITEMS FOR THIS PROJECT INCLUDE THE FOLLOWING:
   A. DIVISION 5:
      1. STRUCTURAL STEEL CONNECTIONS (SEE STRUCTURAL STEEL SECTION/SPECIFICATIONS FOR FURTHER DETAIL)
      2. CURTAIN WALLS AND STOREFRONT SYSTEMS
      3. PREFABRICATED CANOPIES, AWNINGS, AND THEIR CONNECTIONS
   B. DIVISION 6:
      1. PRE-ENGINEERED WOOD TRUSSES

REINFORCED CONCRETE

1. SPECIFICATIONS: IN GENERAL, COMPLY WITH ACI-301-20, "SPECIFICATIONS FOR STRUCTURAL CONCRETE".

2. MATERIALS:
   A. STRUCTURAL CONCRETE:

MIX USAGE	f'c (PSI)	MAX w/cm	EXPOSURE CLASS	AIR CONTENT
LEAN CONCRETE	2,000	---	F0	---
FOOTINGS & INTERIOR COLUMN PIERS	3,500	0.55	F1	---
INTERIOR SLABS ON GRADE	4,000	0.45	F0	---
EXTERIOR FOUNDATION STEMWALLS	3,500	0.55	F1	5%-7%
EXTERIOR UNREINFORCED SLABS ON GRADE & EXTERIOR CONCRETE NOT SUBJECT TO DEICERS	4,000	0.50	F1, S1	5%-7%

   B. ALL DEFORMED REINFORCING BARS: FY = 60,000 PSI.
   C. CEMENT: PORTLAND CEMENT, ASTM C150: TYPE I OR TYPE II; ASTM C1157: TYPE LH OR GU; OR ASTM C595: TYPE IL. ALL CEMENT FOR CONCRETE EXPOSED TO VIEW IS TO BE FROM THE SAME MILL.
   D. AGGREGATES: ASTM C33, USE SIZE NO. 57 FOR ALL MIXES UNLESS NOTED OTHERWISE.
   E. ADMIXTURES:
      1. WATER-REDUCING, LOW AND MID RANGE: ASTM C494, TYPE A OR D.
      2. HIGH-RANGE WATER REDUCING, SUPERPLASTICIZER: ASTM C494, TYPE F OR G.
   F. AIR-ENTRAINING: ASTM C260.
   G. FLY-ASH: ASTM C618, TYPE C OR F.
   H. NON-CHLORIDE, NON-CORROSIVE ACCELERATOR: ASTM C494, TYPE C OR E.
   I. VAPOR RETARDER SHALL CONFORM TO ASTM E1745 "STANDARD SPECIFICATION FOR PLASTIC WATER VAPOR RETARDERS USED IN CONTACT WITH SOIL OR GRANULAR FILL UNDER CONCRETE SLABS ", CLASS A.
   J. VAPOR RETARDER SHALL BE INSTALLED IN ACCORDANCE WITH ASTM E1643 "STANDARD PRACTICE FOR INSTALLATION OF WATER VAPOR RETARDERS USED IN CONTACT WITH EARTH OR GRANULAR FILL UNDER CONCRETE SLABS. THE VAPOR RETARDER/BARRIER SHALL BE A MINIMUM OF 10 MILS THICK AND PLACED DIRECTLY ON THE GRANULAR FILL, BELOW THE CONCRETE FLOOR SLAB. LAP JOINTS A MINIMUM OF 6 INCHES AND SEAL WITH MANUFACTURER 'S RECOMMENDED TAPE OR ADHESIVE.

3. FIELD MANUAL: PROVIDE AT LEAST ONE COPY OF THE ACI FIELD REFERENCE MANUAL, MNL-15(20) IN THE FIELD OFFICE AT ALL TIMES.

4. SUBMITTALS:
   A. SUBMIT A MIX DESIGN FOR EACH MIXTURE USAGE REQUIRED FOR THE PROJECT. CONCRETE PROPORTIONS ARE TO BE ESTABLISHED ON THE BASIS OF PREVIOUS FIELD EXPERIENCE OR TRIAL MIXTURES.
   B. SUBMIT PLACING DRAWINGS FOR ALL REINFORCING. INDICATE STRENGTH, SIZE, AND DETAILS OF ALL BAR REINFORCING.
   C. SUBMIT PRODUCT LITERATURE FOR ADMIXTURES AND CURING COMPOUNDS PROPOSED FOR USE.
   D. SUBMIT REPORTS OF ALL REQUIRED TESTING AND INSPECTIONS.

5. CONTINGENCIES:
   A. PROVIDE 1.0 TON OF REINFORCING BARS TO BE USED AS DIRECTED BY THE ARCHITECT/ENGINEER. COLD BEND IN THE FIELD, IF REQUIRED.
   B. PROVIDE LEAN CONCRETE UNDER FOUNDATIONS FOR ACCIDENTAL OVER EXCAVATION, SOFT SPOTS, AND UTILITY TRENCHES.

6. FOOTINGS, PIERS:
   A. DOWELS IN FOOTINGS TO MATCH VERTICAL PIER OR WALL REINFORCING.
   B. PROVIDE CORNER BARS AT WALL AND FOOTING CORNERS TO MATCH HORIZONTAL REINFORCING.
   C. LAP BARS AS INDICATED IN THE CONCRETE REINFORCING LAP SCHEDULE.

7. SPLICES:
   A. LAP SPLICE REINFORCING BARS AS SCHEDULED. MINIMUM LAP = 36 DIAMETERS.

8. CONSTRUCTION JOINTS:
   A. CONSTRUCTION JOINTS PERMITTED ONLY WHERE SHOWN OR AS APPROVED BY THE STRUCTURAL ENGINEER.

9. FINISHES:
   A. PER ACI 117, SURFACES OF INTERIOR SLABS ON GRADE ARE TO BE FINISHED TO THE FOLLOWING TOLERANCES: FLOOR FLATNESS F(f)=30 AND LEVELNESS F(l)=20 UNLESS NOTED OTHERWISE IN SPECIFICATIONS.
   B. TYPICAL INTERIOR FLOOR AREAS TO RECEIVE CARPET, RESILIENT FLOOR COVERING, OR TO REMAIN EXPOSED - TROWELED FINISH.
   C. INTERIOR FLOOR AREAS TO RECEIVE QUARRY TILE OR CERAMIC TILE - FLOATED FINISH.
   D. EXTERIOR SLABS - BROOM FINISH.

10. CURING:
   A. CURING IS TO COMMENCE IMMEDIATELY AFTER CONCRETE PLACEMENT AND CONTINUE FOR AT LEAST 7 DAYS. DO NOT ALLOW CURING TO BE DELAYED OVERNIGHT.
   B. INTERIOR SLABS TO RECEIVE QUARRY TILE OR CERAMIC TILE ARE TO BE MOIST-CURED WITHOUT THE USE OF A CURING COMPOUND.
   C. ALL OTHER SLABS MAY BE EITHER MOIST-CURED OR RECEIVE AN APPLICATION OF CURING COMPOUND.

11. FIELD QUALITY CONTROL:
   A. OBTAIN CONCRETE FOR REQUIRED TESTS AT POINT OF PLACEMENT. IF CONCRETE IS PUMPED, OBTAIN CONCRETE AT DISCHARGE END.
   B. FOR EACH CLASS OF CONCRETE, OTHER THAN LEAN CONCRETE, PERFORM ONE STRENGTH TEST FOR EACH 50 YARDS, OR FRACTION THEREOF, FOR ONE DAY PLACEMENT.
   C. DETERMINE SLUMP FOR EACH STRENGTH TEST.
   D. DETERMINE AIR CONTENT FOR EACH STRENGTH TEST OF EXTERIOR EXPOSED CONCRETE.
   E. MAINTAIN RECORDS OF ALL TESTS INDICATING EXACT LOCATION OF THE STRUCTURE REPRESENTED BY EACH TEST.

MASONRY (DUMPSTER ENCLOSURE SEE ARCH)

1. MATERIALS:
   A. CONCRETE BLOCK: ASTM C90 (HOLLOW AND SOLID), MINIMUM NET AREA COMPRESSIVE STRENGTH OF CONCRETE MASONRY UNITS = 2,600 PSI.
   B. MORTAR: ASTM 270 TYPE S, MINIMUM COMPRESSIVE STRENGTH = 1,800 PSI
   C. GROUT FOR BOND BEAM AND CORE FILL: ASTM C476, COARSE TYPE WITH f 'c = 2,500 PSI MIN.
   D. DESIGN COMPRESSIVE STRENGTH OF MASONRY SYSTEM: f 'm = 2,250 PSI
   E. ALL DEFORMED REINFORCING BARS: FY = 60,000 PSI. LAP BARS AS INDICATED IN THE CONCRETE MASONRY REINFORCING LAP SCHEDULE.
   F. HORIZONTAL JOINT REINFORCING: STANDARD LADDER TYPE, 9 GA., HOT-DIPPED GALVANIZED FINISH. PROVIDE AT 8" O.C. BELOW GRADE, AND 16" O.C. ABOVE GRADE, UNLESS NOTED OTHERWISE.

2. CONTROL JOINTS:
   A. PROVIDE CONTROL JOINTS IN ALL MASONRY WALLS AT A SPACING NOT TO EXCEED THREE TIMES THE WALL HEIGHT OR 24 FEET ON CENTER, WHICHEVER IS SMALLER. IN ADDITION, PROVIDE CONTROL JOINTS AT THE ENDS OF LINTELS, CHANGES IN WALL HEIGHT, CHANGES IN WALL THICKNESS, WITHIN 2 FEET OF WALL CORNERS AND INTERSECTIONS, TRANSITIONS FROM INTERIOR WALL TO EXTERIOR WALL, AND TRANSITIONS FROM WALL BEARING ON FOUNDATION TO WALL BEARING ON FLOOR SLAB.

3. MISCELLANEOUS:
   A. PROVIDE SOLID OR GROUT-FILLED CMU FOR ALL BELOW-GRADE FOUNDATION WALLS.
   B. FILL CORE SOLID AROUND CAST-IN ANCHOR RODS.
   C. PROVIDE SOLID CMU OR SOLIDLY FILLED HOLLOW CMU AT ALL EPOXY ANCHOR AND WEDGE ANCHOR LOCATIONS. EXTEND SOLID AREA AT LEAST 8" IN ALL DIRECTIONS FROM CENTER OF ANCHOR.
   D. HOLLOW MASONRY UNITS TO BE LAID WITH FULL MORTAR COVERAGE ON HORIZONTAL AND VERTICAL FACE SHELLS. WEBS ARE TO ALSO BE BEDDED IN ALL COURSES OF PIERS, PILASTERS, THE STARTING COURSE ON FOOTINGS, AND WHEN ADJACENT TO CELLS OR CAVITIES TO BE REINFORCED OR FILLED WITH CONCRETE OR GROUT. SOLID UNITS TO BE LAID WITH FULL HEAD AND BED JOINTS.
   E. LAP SPLICE REINFORCING BARS AS SCHEDULED.
   F. ALL GROUTING OF MASONRY WALLS IS TO BE BY THE LOW-LIFT GROUTING METHOD (MAXIMUM LIFT HEIGHT 5'-0"), UNLESS CLEAN-OUTS AND INSPECTIONS ARE PROVIDED.

STRUCTURAL STEEL

1. MATERIALS:
   A. STRUCTURAL STEEL WIDE FLANGE SHAPES: ASTM A992, Fy = 50 KSI
   B. STRUCTURAL STEEL CHANNELS, ANGLES, ETC.: ASTM A36, Fy = 36 KSI
   C. STRUCTURAL STEEL PLATES: UNLESS NOTED OTHERWISE - ASTM A36, Fy = 36 KSI; ASTM A529 OR A572, Fy = 50 KSI, WHERE NOTED
   D. HIGH STRENGTH BOLTS: ASTM A325 OR A490
   E. ANCHOR RODS: ASTM F1554, GRADE 36, UNLESS NOTED OTHERWISE
   F. ELECTRODES: SERIES E70
   G. RECTANGULAR HSS: ASTM A500, GRADE C, FY = 50 KSI

2. SPECIFICATIONS:
   A. WELDING PERSONNEL AND PROCEDURES ARE TO BE QUALIFIED PER AWS D1.1. UNLESS SPECIFICALLY SHOWN OTHERWISE, DESIGN, FABRICATION AND ERECTION TO BE GOVERNED BY THE LATEST REVISIONS OF:
      1. AISC SPECIFICATION FOR THE DESIGN, FABRICATION AND ERECTION OF STRUCTURAL STEEL FOR BUILDINGS.
      2. AISC CODE OF STANDARD PRACTICE.
      3. STRUCTURAL WELDING CODE, AWS D1.1 OF THE AMERICAN WELDING SOCIETY.
      4. SPECIFICATIONS FOR STRUCTURAL JOINTS USING ASTM A325 OR A490 BOLTS.

3. SUBMITTALS:
   A. SUBMIT SHOP DRAWINGS FOR REVIEW AND APPROVAL WHICH INCLUDE ERECTION PLANS, CONNECTION DETAILS, AND SHOP DETAILS INDICATING CUTS, COPES, CAMBERS, CONNECTIONS, HOLES, THREADED FASTENER TYPES AND SIZES, AND SIZES AND LENGTHS OF WELDS.
   B. INDICATE MATERIAL SPECIFICATIONS, STRENGTHS, AND FINISHES.

4. COATINGS:
   A. DO NOT PAINT STEEL OR ANCHOR RODS WHICH WILL BE ENCASED IN CONCRETE OR MASONRY, NOR ANY STEEL WHICH IS SCHEDULED TO RECEIVE SPRAY-APPLIED OR INTUMESCENT-MASTIC FIREPROOFING.
   B. PAINT ALL INTERIOR EXPOSED STEEL (INCLUDING INTERIOR LINTELS) WITH TWO COATS OF RED-OXIDE PRIMER.
   C. HOT-DIP GALVANIZE ALL EXTERIOR STEEL (INCLUDING LINTELS AND BRICK SHELF ANGLES).
   D. PROVIDE A FIELD-APPLIED COAT OF ASPHALT-MASTIC PAINT FOR ALL BELOW-GRADE STEEL (INCLUDING ANCHOR RODS, NUTS, WASHERS, BASE PLATES, AND THE BELOW-GRADE PORTION OF COLUMNS) WHICH IS NOT FULLY ENCASED IN CONCRETE.
   E. INTERIOR NON-EXPOSED STEEL NEED NOT BE PRIME PAINTED.

5. MISCELLANEOUS:
   A. PROVIDE HOLES FOR OTHERS. IF OPENING IS NOT SHOWN ON THE STRUCTURAL DRAWINGS, OBTAIN PRIOR APPROVAL.
   B. STEEL SUPPORTING OR CONNECTING TO MECHANICAL AND OTHER EQUIPMENT AND ROOF OPENINGS AS SHOWN ON ARCHITECTURAL, MECHANICAL AND/OR ON STRUCTURAL DRAWINGS IS SHOWN FOR BIDDING PURPOSES ONLY. CONTRACTOR IS TO RECONCILE EXACT SIZE AND LOCATION WITH MECHANICAL AND OTHER REQUIREMENTS BEFORE PROCEEDING WITH THIS WORK.
   C. GROUT UNDER BEARING PLATES TO BE NON-METALLIC, NON-SHRINKING TYPE.
   D. STEEL BELOW GRADE TO BE PROTECTED BY A MINIMUM OF 3" OF CONCRETE, 4" OF SOLID MASONRY, OR A FIELD-APPLIED COAT OF ASPHALT-MASTIC PAINT.
   E. PROVIDE HEAVY PLATE WASHERS AT ALL ANCHOR RODS.
   F. FINISH ENDS OF ALL COLUMNS, STIFFENERS AND ALL OTHER MEMBERS IN DIRECT BEARING.
   G. PROVIDE BOLT HOLES FOR WOOD NAILERS AND JOISTS BOLTED TO BEAMS.
   H. STEEL IN CONTACT WITH PRESSURE-TREATED LUMBER IS TO BE PROTECTED FROM CORROSION FROM PRESERVATIVE CHEMICALS WITH A 20 MIL (MIN.) VAPOR BARRIER. BOLTS AND SCREWS THROUGH PRESSURE-TREATED LUMBER ARE TO BE HOT DIPPED GALVANIZED PER ASTM A153 WITH A MINIMUM G185 COATING OR STAINLESS STEEL WITH CHEMICAL COMPOSITION CONFORMING TO AISI 303/304 OR AISI 316.
   I. SEE ARCHITECTURAL SECTIONS AND DETAILS FOR ALL MISCELLANEOUS STRUCTURAL STEEL NOT OTHERWISE INDICATED IN THE STRUCTURAL DRAWINGS.

6. FIELD QUALITY CONTROL:
   A. INSPECTION AGENCY IS TO PERFORM INSPECTION OF BOLTED CONNECTIONS PER THE REQUIREMENTS OF AISC SPECIFICATION FOR STRUCTURAL JOINTS.

STRUCTURAL LUMBER

1. MATERIALS:
   A. STRUCTURAL LUMBER: ALL DESIGN VALUES PER 2018 NFPA NATIONAL DESIGN SPECIFICATION. ANY SUBSTITUTIONS ARE TO MEET MINIMUM DESIGN VALUES OF ABOVE MEMBERS. UNLESS NOTED OTHERWISE FRAMING MATERIALS SHALL BE:
      1) BEAMS, HEADERS, JOISTS, AND RAFTERS - SPRUCE-PINE-FIR NO.1/NO.2 AS GRADED BY NLGA
      2) WALL STUDS 2x6 - SPRUCE-PINE-FIR NO.1/NO.2 AS GRADED BY NLGA
      3) MICRO=LAM (M=L) OR LAMINATED VENEER LUMBER (LVL): Fb = 2,600 PSI, Fv = 285 PSI, Fc (PERP.) = 750 PSI, E = 1,900 KSI.
      4) PARALLAM OR PARALLEL STRAND LUMBER (PSL)
         a. BEAMS: Fb = 2,900 PSI, Fv = 290 PSI, Fc (PERP.) = 750 PSI, E = 2,000 KSI.
         b. COLUMNS: Fb = 2,400 PSI, Fv = 190 PSI, Fc (PERP.) = 545 PSI, E = 1,800 KSI.
      5) LAMINATED STRAND LUMBER (LSL) BEAMS: Fb = 2360 PSI, Fv = 410, Fc (PERP.) = 875 PSI, E = 1,550 KSI.
      6) DECKING AND SHEATHING (OSB OR PLYWOOD) PER DOC PS-1 AND PS-2:
         ROOFS: 5/8" NOMINAL APA RATED SHEATHING, 40/20, EXPOSURE 1; APA RATED A-C GRADED PANEL FINISH (PLYWOOD)
         WALL SHEATHING: 7/16" APA RATED SHEATHING, WALL-24, EXPOSURE 1 (OSB OR PLYWOOD)
   B. ALL LUMBER IN CONTACT WITH CONCRETE, MASONRY, GROUND/SOIL, OR USED IN CONDITIONS WITH MOISTURE PRESENT, IS TO BE PRESSURE-TREATED TO RESIST DECAY PER AWPA U1 AND M4. PRESERVATIVES USED FOR PRESSURE TREATMENT ARE TO BE ALKALINE COPPER QUAT, ACQ-C OR ACQ-D. OTHER PRESERVATIVES PROPOSED FOR USE ARE TO BE SUBMITTED FOR REVIEW PRIOR TO ERECTION OR INSTALLATION ON THE PROJECT.

2. SPECIFICATIONS:
   A. UNLESS SPECIFICALLY SHOWN OTHERWISE, DESIGN, FABRICATION AND ERECTION ARE TO BE GOVERNED BY THE LATEST REVISIONS OF:
      1. NATIONAL DESIGN SPECIFICATION FOR WOOD CONSTRUCTION.
      2. U.S. PRODUCT STANDARD PS-1 FOR CONSTRUCTION AND INDUSTRIAL PLYWOOD.
      3. APA PS 2-18, PERFORMANCE STANDARD FOR WOOD STRUCTURAL PANELS.
      4. APA DESIGN/CONSTRUCTION GUIDE - RESIDENTIAL AND COMMERCIAL.

3. CONNECTIONS:
   A. CONNECTIONS FOR WOOD MEMBERS SHALL BE MINIMALLY FASTENED AS PRESCRIBED IN TABLE 2304.10.2 OF THE REFERENCED BUILDING CODE UNLESS DETAILED OTHERWISE. ALL NAILS ARE TO BE COMMON WIRE NAILS, UNLESS SPECIFICALLY NOTED OTHERWISE.
   B. FOUNDATION PLATES ON CONCRETE OR MASONRY WALLS SHALL BE PRESSURE TREATED LUMBER, SOUTHERN PINE #2 GRADE MINIMUM. SILLS SHALL BE ANCHORED TO CONCRETE OR MASONRY WITH ½ " DIAMETER x 12" LONG ANCHOR RODS SPACED AT 48" O.C. MAXIMUM, UNLESS NOTED OTHERWISE. THERE SHALL BE A MINIMUM OF 3 BOLTS PER SILL PIECE WITH ONE BOLT LOCATED WITHIN 12" OF EACH END OF EACH PIECE. DO NOT PROVIDE A SILL PLATE SPLICE UNDER ANY POST OR STUD. SEE SHEARWALL SCHEDULE AND DETAILS FOR ADDITIONAL REQUIREMENTS.
   C. JOISTS TO BEAMS OR JOISTS TO TRUSSES - 16 GA. STD. JOIST HANGERS, UNLESS SHOWN OTHERWISE. BEAMS TO BEAMS - 16 GA. BEAM HANGERS, UNLESS SHOWN OTHERWISE.
   D. ALL HANGERS, STRAPS, CAPS, BASES, HOLDOWNS, TIES OR OTHER CONNECTORS IN CONTACT WITH PRESSURE-TREATED LUMBER ARE TO BE BATCH/POST HOT DIPPED GALVANIZED PER ASTM A123 WITH A MINIMUM G185 COATING OR STAINLESS STEEL WITH CHEMICAL COMPOSITION CONFORMING TO AISI 303/304 OR AISI 316.
   E. ALL FASTENERS INCLUDING NAILS, ANCHOR RODS, POWDER ACTUATED FASTENERS, SCREWS, BOLTS, AND THREADED RODS, IN CONTACT WITH PRESSURE TREATED LUMBER ARE TO BE HOT DIPPED GALVANIZED PER ASTM A153 WITH A MINIMUM G185 COATING OR STAINLESS STEEL WITH CHEMICAL COMPOSITION CONFORMING TO AISI 303/304 OR AISI 316. FASTENERS AND CONNECTORS ARE TO BE OF THE SAME MATERIAL, STAINLESS STEEL OR HOT DIPPED GALVANIZED, DO NOT MIX MATERIALS.
   F. ALL MECHANICAL ANCHORS INCLUDING WEDGE ANCHORS AND SLEEVE ANCHORS IN CONTACT WITH PRESSURE TREATED LUMBER ARE TO BE STAINLESS STEEL WITH CHEMICAL COMPOSITION CONFORMING TO AISI 303/304 OR AISI 316.
   G. SHEATHING TO FRAMING:
      1. ROOFS - USE 10d NAILS AT 6" ON CENTER AT PANEL EDGES AND 12" ON CENTER AT INTERMEDIATE SUPPORTS (UNO). PROVIDE ONE PANEL EDGE CLIPS PER SPAN.
      2. STUD WALLS - USE 8d COMMON OR GALVANIZED BOX NAILS AT 6" ON CENTER AT PANEL EDGES AND 12" ON CENTER AT INTERMEDIATE SUPPORTS (UNO). SEE SHEARWALL SCHEDULES FOR ADDITIONAL FASTENING REQUIREMENTS.
   H. TRUSS TO WALL OR RAFTERS TO WALL - STANDARD HURRICANE ANCHORS AT EACH BEARING POINT. ADDITIONAL ANCHORS MAY BE REQUIRED BASED UPON FINAL LAYOUT AND DESIGN BY THE TRUSS MANUFACTURER DURING THE SHOP DRAWING PROCESS.

4. MISCELLANEOUS:
   A. PROVIDE ONE LINE OF SOLID BLOCKING OR CROSS BRIDGING AT 8'-0" O/C MAX. FOR ALL FLOOR JOISTS. USE SOLID BLOCKING AT ALL JOIST AND RAFTER BEARINGS.
   B. PROVIDE SOLID BLOCKING AT MID-HEIGHT OF WALLS FOR EACH OF THE FOLLOWING CONDITIONS: EXTERIOR STUD WALLS, INTERIOR BEARING PARTITIONS, AND ALL WALL FRAMING WHICH IS NOT SHEATHED ON EACH SIDE WITH GYPSUM OR WOOD SHEATHING.
   C. USE SINGLE JACK STUDS UNDER BEAM AND HEADER BEARINGS FOR ROUGH OPENINGS UP AND INCLUDING 4'-0", AND DOUBLE JACK STUDS UNDER BEAM AND HEADER BEARINGS FOR SPANS GREATER THAN 4'-0", UNLESS SHOWN OTHERWISE.
   D. EACH MEMBER OF MULTIPLE MEMBER BEAMS AND COLUMNS ARE TO BE NAILED TOGETHER WITH 2 ROWS OF 10d NAILS AT 6" ON CENTER, STAGGERED, THE FULL LENGTH OF THE MEMBER. FOR MULTIPLE MEMBER LVL OR LSL PRODUCTS, FOLLOW MINIMUM FASTENING REQUIREMENTS OF THE MANUFACTURER.

ENGINEERED WOOD TRUSSES

1. MATERIALS:
   A. LUMBER: AS REQUIRED BY THE TRUSS MANUFACTURE, KD 19 PERCENT MAXIMUM MOISTURE CONTENT (15 PERCENT MAXIMUM MOISTURE CONTENT FOR SOUTHERN PINE MEMBERS).
   B. MEMBER SIZES: THE FOLLOWING MEMBERS SHALL BE OF A MINIMUM SIZE SPECIFIED:
      1. TOP CHORD: 2x6
      2. BOTTOM CHORD: 2x6
      3. END VERTICAL WEBS: 2x6
   C. EXPOSED TRUSSES IN DINING AREA (SEE ARCHITECTURAL PLANS) SHALL BE FREE AND CLEAR OF ALL STAMP AND MARKINGS.
   D. CONNECTIONS: ALL INTERNAL TRUSS CONNECTIONS ARE TO BE DESIGNED BY THE TRUSS MANUFACTURER. CONNECTORS ARE TO BE DEFORMED PLATE TYPE, OF MINIMUM 20 GAUGE GALVANIZED STEEL SHEET. ALL JOINTS ARE TO BE DESIGNED USING METHODS AS SET FORTH IN TPI STANDARDS.
   E. ALL HANGERS, STRAPS, CAPS, BASES, HOLDOWNS, TIES OR OTHER CONNECTORS IN CONTACT WITH PRESSURE-TREATED LUMBER ARE TO BE BATCH/POST HOT DIPPED GALVANIZED PER ASTM A123 WITH A MINIMUM G185 COATING OR STAINLESS STEEL WITH CHEMICAL COMPOSITION CONFORMING TO AISI 303/304 OR AISI 316.
   F. ALL FASTENERS INCLUDING NAILS, ANCHOR RODS, POWDER ACTUATED FASTENERS, SCREWS, BOLTS, AND THREADED RODS, IN CONTACT WITH PRESSURE TREATED LUMBER ARE TO BE HOT DIPPED GALVANIZED PER ASTM A153 WITH A MINIMUM G185 COATING OR STAINLESS STEEL WITH CHEMICAL COMPOSITION CONFORMING TO AISI 303/304 OR AISI 316. FASTENERS AND CONNECTORS ARE TO BE OF THE SAME MATERIAL, STAINLESS STEEL OR HOT DIPPED GALVANIZED, DO NOT MIX MATERIALS.
   G. SPECIFICATIONS AND REFERENCE STANDARDS: UNLESS SPECIFICALLY SHOWN OTHERWISE, DESIGN, FABRICATION, ERECTION, HANDLING AND BRACING REQUIREMENTS ARE TO BE GOVERNED BY THE LATEST REVISIONS OF:
      1. NATIONAL DESIGN SPECIFICATIONS FOR STRESS-GRADE LUMBER AND ITS FASTENINGS.
      2. TIMBER CONSTRUCTION STANDARDS.
      3. DESIGN SPECIFICATIONS FOR LIGHT METAL PLATE CONNECTED WOOD TRUSSES.
      4. TRUSS PLATE INSTITUTE PUBLICATION-BTW BRACING WOOD TRUSSES: COMMENTARY AND RECOMMENDATIONS EXCEPT AS NOTED BELOW.

2. DESIGN:
   A. ALL TRUSSES ARE TO BE DESIGNED BY THE TRUSS MANUFACTURER FOR THE FOLLOWING LOADS:
      ROOFS:

- TOP CHORD DEAD LOAD:	10 PSF + MECH
- TOP CHORD LIVE LOAD:	20 PSF + DRIFT
- BOTTOM CHORD DEAD LOAD:	10 PSF
- BOTTOM CHORD LIVE LOAD:	0 PSF
LIVE LOAD DEFLECTION LIMIT:	L/360

      SNOW LOADS:
      IN ACCORDANCE WITH ASCE 7-16 USING THE CRITERIA DEFINED IN THE "DESIGN LOADS" SECTION OF THE GENERAL STRUCTURAL NOTES.

      WIND LOADS:
      IN ACCORDANCE WITH ASCE 7-16 USING THE CRITERIA DEFINED IN THE "DESIGN LOADS" SECTION OF THE GENERAL STRUCTURAL NOTES. TRUSSES ARE TO BE DESIGNED FOR "COMPONENTS AND CLADDING" WIND LOADS UNLESS NOTED OTHERWISE.

      OTHER LATERAL LOADS:
      SEE PLANS AND DETAILS FOR DRAG STRUT LOCATIONS AND LOADING REQUIREMENTS.

      SPECIAL LOADS:
      SEE PLANS AND ELEVATIONS FOR ADDITIONAL LOADS TO BE CONSIDERED IN THE TRUSS DESIGN.
   B. WHERE TRUSSES ARE REQUIRED TO FRAME INTO OTHER TRUSSES, DESIGN OF THE CONNECTIONS ARE TO BE THE RESPONSIBILITY OF THE TRUSS SUPPLIER. THE TRUSS SUPPLIER IS TO MAKE NECESSARY PROVISIONS IN THE SUPPORTING TRUSS TO ACCEPT THE TYPE OF HANGER REQUIRED.
   C. THE DESIGN OF ALL WEB MEMBER PERMANENT BRACING REQUIRED FOR THE STRUCTURAL ADEQUACY OF THE TRUSSES, IS TO BE THE SOLE RESPONSIBILITY OF THE TRUSS SUPPLIER.
   D. ADDITIONAL PERMANENT BRACE SIZES AND CONNECTIONS, NOT PROVIDED BY THE SHEATHING SHOWN ON THE CONSTRUCTION DRAWINGS, ARE TO BE THE SOLE RESPONSIBILITY OF THE TRUSS SUPPLIER. THIS BRACING CAN INCLUDE, BUT IS NOT LIMITED TO, TOP CHORD BRACING FOR TRUSSES WITH PIGGY-BACKS, AND INTERMEDIATE BRACES FOR GABLE TRUSS WEB MEMBERS.

3. SUBMITTALS:
   A. TRUSS DESIGNS ARE TO BE SUBMITTED FOR REVIEW PRIOR TO FABRICATION. TRUSS SUBMITTAL IS TO INCLUDE THE FOLLOWING INFORMATION:
      1. DESIGN INFORMATION FOR EACH TYPE OF TRUSS SUPPLIED.
      2. LAYOUT DRAWING INDICATING LOCATION OF EACH SPECIFIC TRUSS TYPE AND ANY PERMANENT HORIZONTAL BRACING MEMBERS.
      3. PERMANENT MEMBER BRACE LOCATIONS, BRACE SIZES, AND CONNECTIONS.
      4. TRUSS HANGER TYPE AND LOCATION, FOR ALL TRUSSES FRAMING INTO TRUSSES.
      5. TRUSS DESIGNS AND LAYOUT DRAWING STAMPED BY A REGISTERED PROFESSIONAL ENGINEER, IN THE STATE OF PROJECT LOCATION.
   B. SUBMITTALS WHICH DO NOT INCLUDE THE ABOVE LISTED INFORMATION WILL BE RETURNED TO THE CONTRACTOR PRIOR TO REVIEW.
   C. FINAL APPROVED SUBMITTALS SHALL BE SUBMITTED TO THE GOVERNING BUILDING DEPARTMENT FOR RECORD.

4. MISCELLANEOUS:
   A. ALL GIRDER TRUSSES ARE TO BE 2-PLY MINIMUM.
   B. UNLESS SPECIFICALLY NOTED OTHERWISE ON THE APPROVED TRUSS SHOP DRAWINGS, ALL MEMBERS OF MULTIPLE TRUSSES ARE TO BE NAILED TOGETHER WITH 10d COMMON NAILS AT 8" O.C., FOR DOUBLE TRUSSES, OR WITH 16d COMMON NAILS AT 8" O.C. FROM EACH SIDE, FOR TRIPLE TRUSSES.

POST-INSTALLED ANCHOR SYSTEMS

1. GENERAL:
   A. LISTED ANCHOR PRODUCTS PROVIDED BELOW ARE NOT TO BE USED AS INTERCHANGEABLE PRODUCTS. EACH ANCHOR HAS DEFINED CAPACITIES BASED UPON TESTED PERFORMANCE WITH APPLICABLE SAFETY FACTORS AND WILL VARY ACROSS MANUFACTURERS. TYPES OF ANCHORS INDICATED THROUGHOUT THE DESIGN DOCUMENTS ARE DETAILED FOR THEIR SPECIFIC PURPOSE AND CAPACITY. SUBSTITUTION OF ANCHORS FROM THOSE SPECIFIED ARE ONLY ALLOWED AFTER ENGINEER REVIEW AND APPROVAL OR AMENDMENT FROM WRITTEN REQUEST BY THE CONTRACTOR.
   B. PROVIDE ANCHORAGE MATCHING MANUFACTURER, TYPE, DIAMETER, EMBEDMENT, AND BASE MATERIAL AS INDICATED IN THE DOCUMENTS.
   C. ALL POST-INSTALLED ANCHORS TO BE HAMMER DRILLED. FOLLOW ALL HOLE CLEANING AND INSTALLATION INSTRUCTIONS AS STIPULATED BY THE ANCHOR MANUFACTURER. FOLLOW ALL OSHA GUIDELINES FOR CONCRETE DRILLING AS IT PERTAINS TO SILICA DUST.
   D. INSTALLATION OF ADHESIVE ANCHORS MUST BE PERFORMED BY PERSONNEL TRAINED TO INSTALL ADHESIVE ANCHORS THROUGH MANUFACTURER TRAINING PROGRAMS.
   E. INSTALLATION OF ADHESIVE ANCHORS IN THE HORIZONTAL OR UPWARDLY INCLINED ORIENTATION AND WHERE SUPPORTING SUSTAINED TENSION LOADS SHALL BE INSTALLED BY CERTIFIED PERSONNEL BY ACI/CRSI INSTALLATION PROGRAMS.
   F. MINIMUM CONCRETE AGE FOR POST-INSTALLED ADHESIVE ANCHORS SHALL BE NOT LESS THAN 28 DAYS.
   G. ALL ANCHORS IN CONTACT WITH PRESSURE TREATED LUMBER ARE TO BE HOT DIPPED GALVANIZED PER ASTM A153 WITH A MINIMUM G185 COATING OR STAINLESS STEEL WITH CHEMICAL COMPOSITION CONFORMING TO AISI 303/304 OR AISI 316. FASTENERS AND CONNECTORS ARE TO BE OF THE SAME MATERIAL, STAINLESS STEEL OR HOT DIPPED GALVANIZED, DO NOT MIX MATERIALS.
   H. MINIMUM EMBEDMENT FOR MECHANICAL EXPANSION ANCHORAGE SYSTEMS IS TO BE 7 BOLT DIAMETERS. MINIMUM EMBEDMENT FOR SCREW ANCHORAGE AND ADHESIVE ANCHORAGE SYSTEMS IS TO BE 9 BOLT DIAMETERS.

2. ANCHORAGE TO CONCRETE
   A. ACCEPTABLE MECHANICAL EXPANSION ANCHORAGE SYSTEMS:
      1. DEWALT POWER STUD +SDI OR +SD2 WEDGE EXPANSION ANCHOR
      2. HILTI KWIK BOLT 3 EXPANSION ANCHOR
      3. HILTI KWIK BOLT TZ2 EXPANSION ANCHOR
      4. SIMPSON STRONG-BOLT 2 WEDGE EXPANSION ANCHOR
   B. ACCEPTABLE MECHANICAL SLEEVE ANCHORAGE SYSTEMS: (MAY NOT BE USED TO SECURE MAIN BUILDING FRAME COMPONENTS)
      1. DEWALT LOK-BOLT AS SLEEVE ANCHOR
      2. HILTI HLC SLEEVE ANCHOR
      3. SIMPSON SLEEVE-ALL SLEEVE ANCHOR
   C. ACCEPTABLE MECHANICAL SCREW ANCHORAGE SYSTEMS:
      1. DEWALT SCREW-BOLT+
      2. HILTI KWIK HUS-EZ SCREW ANCHOR
      3. SIMPSON TITEN HD SCREW ANCHOR
   D. ACCEPTABLE ADHESIVE ANCHORAGE SYSTEMS:
      1. DEWALT AC200+ ADHESIVE FOR REINFORCING BAR
      2. DEWALT PURE50+ ADHESIVE FOR THREADED ROD AND REINFORCING BAR
      3. DEWALT PURE110+ ADHESIVE FOR THREADED ROD AND REINFORCING BAR
      4. HILTI HIT-HY 200v3 ADHESIVE FOR THREADED ROD, REINFORCING BAR, AND HILTI SPECIFIC ROD AND INSERT SYSTEMS.
      5. HILTI HIT-RE 500 ADHESIVE FOR THREADED ROD AND REINFORCING BAR.
      6. HILTI HIT-RE 100 ADHESIVE FOR THREADED ROD AND REINFORCING BAR.
      7. SIMPSON AT-XP ADHESIVE FOR THREADED ROD AND REINFORCING BAR.
      8. SIMPSON SET-3G ADHESIVE FOR THREADED ROD AND REINFORCING BAR.

ABBREVIATIONS

AB	ANCHOR BOLT
ADD'L	ADDITIONAL
ALUM	ALUMINUM
ARCH	ARCHITECTURAL
B/ or BO	BOTTOM OF
BFB	BOTTOM FLANGE BRACE
BLDG	BUILDING
BM	BEAM
BOT	BOTTOM
CFMF	COLD-FORMED METAL FRAMING
CFMT	COLD-FORMED METAL TRUSS
CJ	CONTROL OR CONSTRUCTION JOINT
CLR	CLEAR
CM	CONSTRUCTION MANAGER
CMU	CONCRETE MASONRY UNIT
COL	COLUMN
CONC	CONCRETE
CONT	CONTINUOUS
COORD	COORDINATE
CY	CUBIC YARD
DBL	DOUBLE
DEMO	DEMOLISH OR DEMOLITION
DET	DETAIL
DIA	DIAMETER
DIAG	DIAGONAL
DIM	DIMENSION
DWG	DRAWING
EA	EACH
EJ	EXPANSION JOINT
ENG	ENGINEER
EW	EACH WAY
EXP	EXPANSION
EE	EACH END
FDN	FOUNDATION
FIN	FINISH OR FINISHED
FLR	FLOOR
FO	FACE OF
FTG	FOOTING
FRTW	FIRE-RETARDANT TREATED WOOD
FV	FIELD VERIFY
GA	GAGE
GALV	GALVANIZE
GC	GENERAL CONTRACTOR
HC	HOLLOW CORE
HORIZ	HORIZONTAL
ID	INSIDE DIMENSION
IF	INSIDE FACE
INT	INTERIOR
JST	JOIST
JT	JOINT
KB	KICKER BRACE
L	ANGLE
LGMF	LIGHT GAGE METAL FRAMING
LLBB	LONG LEG BACK-TO-BACK
LLOS	LONG LEG OUTSTANDING
LLH	LONG LEG HORIZONTAL
LLV	LONG LEG VERTICAL
LW	LONG WAY
MAS	MASONRY
MAX	MAXIMUM
MIN	MINIMUM
MTL	METAL
N	NORTH
NA	NOT APPLICABLE
NIC	NOT IN CONTRACT
NOM	NOMINAL
NTS	NOT TO SCALE
OC	ON CENTER
OD	OUTSIDE DIAMETER
OH	OVERHEAD
OPP	OPPOSITE
OPNG	OPENING
OSB	ORIENTED STRAND BOARD
PAF	POWDER ACTUATED FASTENERS
PC	PRECAST
PEMB	PRE-ENGINEERED METAL BUILDING
PERP	PERPENDICULAR
PSI	POUNDS PER SQUARE INCH
PSF	POUNDS PER SQUARE FOOT
REINF	REINFORCING
REQ'D	REQUIRED
SCHED	SCHEDULE
SECT	SECTION
SER	STRUCTURAL ENGINEER OF RECORD
SF	SQUARE FOOT
SL	SLOPED
SLBB	SHORT LEG BACK-TO-BACK
SPEC	SPECIFICATION
SQ	SQUARE
SS	STAINLESS STEEL
STD	STANDARD
SW	SHORT WAY
SY	SQUARE YARD
SYM	SYMMETRICAL
T/ or TO	TOP OF
T&B	TOP AND BOTTOM
TEMP	TEMPORARY OR TEMPERATURE
T&G	TONGUE AND GROOVE
TYP	TYPICAL
UN	UNLESS NOTED
UNO	UNLESS NOTED OTHERWISE
VB	VAPOR BARRIER
VERT	VERICAL
VIF	VERIFY IN FIELD
W	WIDE FLANGE
W/	WITH
W/O	WITHOUT
WT	WEIGHT
WWF	WELDED WIRE FABRIC
YD	YARD

WALL ELEMENTS

TRIBUTARY AREA	POSITIVE PRESSURE (PSF)	NEGATIVE PRESSURE (PSF)	PRESSURE WITHIN 10 FT. OF CORNERS (PSF)
10 SQ. FT.	40	43	53
25 SQ. FT.	37	41	48
50 SQ. FT.	36	39	45
100 SQ. FT.	34	37	41
200 SQ. FT.	32	35	38
≥ 500 SQ. FT.	30	33	33

ROOF ELEMENTS

TRIBUTARY AREA	UPLIFT PRESSURE (PSF)	UPLIFT WITHIN 10 FT. OF EDGES (PSF)	UPLIFT WITHIN 10 FT. OF CORNERS (PSF)
10 SQ. FT.	69	90	90
25 SQ. FT.	54	71	71
50 SQ. FT.	48	63	63
≥ 100 SQ. FT.	43	58	58

PARAPETS OR SCREEN WALL ELEMENTS

TRIBUTARY AREA	EDGE PRESSURE (PSF)	PRESSURE WITHIN 10 FT. OF CORNERS (PSF)	
10 SQ. FT.	129	129	
25 SQ. FT.	108	108	
50 SQ. FT.	99	99	
≥ 100 SQ. FT.	91	91	

C. & C. PRESSURE SCHEDULE NOTES:
1. LINEAR INTERPOLATION IS ACCEPTABLE FOR TRIBUTARY AREAS BETWEEN THOSE SHOWN.
2. LOADS GIVEN ARE ULTIMATE LOADS OBTAINED FROM ASCE 7-22. MULTIPLY VALUES BY 0.6 TO OBTAIN SERVICE-LEVEL LOADS.

PROJECT NUMBER: 26.34.308
DESIGNED BY: LG
DRAWN BY: CMS
CHECKED BY: ASH
DOCUMENT STATUS: ☐ PROGRESS ☐ PERMIT ■ BIDDING ☐ CONSTRUCTION

Consultant:
Jezerinac Geers
Structural Engineering
Jezerinac Geers & Associates, Inc.
5640 Frantz Road, Dublin, OH 43017
614.766.0066, fax 614.766.1223
www.jgaeng.com

BID DOCUMENTS ONLY NOT FOR CONSTRUCTION

COPYRIGHT 2026
ALL DRAWINGS AND SPECIFICATIONS SHALL REMAIN THE PROPERTY OF RED ARCHITECTURE LLC AND MAY NOT BE USED, DUPLICATED, OR ALTERED WITHOUT WRITTEN CONSENT OF THE ARCHITECT.

ECP PARTNERS

CMG HIGHLAND CITY SHELL, FL
TBD US 98
LAKELAND, FL 33812

Issue Record:

02/25/26	PERMIT SET
02/25/26	BID SET

Revisions:

Drawn: CMS
Checked: LG

Project No. 26.34.308

Contents:
GENERAL STRUCTURE INFO.

S000

IN ACCORDANCE WITH CHAPTER 17 OF THE REFERENCE BUILDING CODE, THE OWNER SHALL EMPLOY INSPECTION AGENCIES TO PERFORM SPECIAL INSPECTIONS DURING CONSTRUCTION INCLUDING INSPECTIONS OF SHOP-FABRICATED ITEMS WHEN APPLICABLE. ALL INSPECTION AGENCIES, INCLUDING FABRICATION FACILITIES, WHEN REQUIRED, SHALL BE QUALIFIED AND APPROVED BY THE BUILDING OFFICIAL. REFER TO OTHER DISCIPLINES FOR SPECIAL INSPECTIONS OF NON-STRUCTURAL SYSTEMS.

TABLE 1 STATEMENT OF SPECIAL INSPECTIONS FOR STRUCTURAL DISCIPLINE

REQUIRED SPECIAL INSPECTIONS AND TESTS FOR SOILS		
TYPE	CONTINUOUS SPECIAL INSPECTION	PERIODIC SPECIAL INSPECTION
1. VERIFY MATERIALS BELOW SHALLOW FOUNDATIONS ARE ADEQUATE TO ACHIEVE THE DESIGN BEARING CAPACITY.	—	X
2. VERIFY EXCAVATIONS ARE EXTENDED TO PROPER DEPTH AND HAVE REACHED PROPER MATERIAL.	—	X
3. PERFORM CLASSIFICATION AND TESTING OF COMPACTED FILL MATERIALS.	—	X
4. VERIFY USE OF PROPER MATERIALS, DENSITIES, AND LIFT THICKNESSES DURING PLACEMENT AND COMPACTION OF COMPACTED FILL.	X	—
5. PRIOR TO PLACEMENT OF COMPACTED FILL, INSPECT SUBGRADE AND VERIFY THAT SITE HAS BEEN PREPARED PROPERLY.	—	X

REQUIRED SPECIAL INSPECTIONS AND TESTS OF CONCRETE CONSTRUCTION		
TYPE	CONTINUOUS SPECIAL INSPECTION	PERIODIC SPECIAL INSPECTION
1. INSPECT REINFORCEMENT AND VERIFY PLACEMENT.	—	X
2. REINFORCING BAR WELDING:		
A. VERIFY WELDABILITY OF REINFORCING BARS OTHER THAN ASTM A706.	—	X
B. INSPECT SINGLE PASS FILLET WELDS, MAXIMUM 5/16".	—	X
C. INSPECT ALL OTHER WELDS.	X	—
3. INSPECT ANCHORS CAST IN CONCRETE.	—	X
4. INSPECT ANCHORS POST-INSTALLED IN HARDENED CONCRETE MEMBERS.		
A. ADHESIVE ANCHORS INSTALLED IN HORIZONTALLY OR UPWARDLY INCLINED ORIENTATIONS TO RESIST SUSTAINED TENSION LOADS.	X	—
B. MECHANICAL ANCHORS AND ADHESIVE ANCHORS NOT DEFINED IN 4A.	—	X
5. VERIFY USE OF REQUIRED DESIGN MIX.	—	X
6. PRIOR TO CONCRETE PLACEMENT, FABRICATE SPECIMENS FOR STRENGTH TESTS, PERFORM SLUMP AND AIR CONTENT TESTS, AND DETERMINE THE TEMPERATURE OF THE CONCRETE.	X	—
7. INSPECT CONCRETE AND SHOTCRETE PLACEMENT FOR PROPER APPLICATION TECHNIQUES.	X	—
8. VERIFY MAINTENANCE OF SPECIFIED CURING TEMPERATURE AND TECHNIQUES.	—	X
9. INSPECT FORMWORK FOR SHAPE, LOCATION AND DIMENSIONS OF THE CONCRETE MEMBER BEING FORMED.	—	X

'LEVEL C' QUALITY ASSURANCE REQUIRED SPECIAL INSPECTIONS AND TESTS OF MASONRY CONSTRUCTION
MINIMUM TESTS
VERIFICATION OF f'_m AND f'_{AAC} IN ACCORDANCE WITH ARTICLE 1.4B PRIOR TO CONSTRUCTION AND FOR EVERY 5,000 SQ. FT. DURING CONSTRUCTION.
VERIFICATION OF PROPORTIONS OF MATERIALS IN PREMIXED OR PREBLENDED MORTAR AND GROUT OTHER THAN SELF-CONSOLIDATING GROUT AS DELIVERED TO THE PROJECT SITE.
VERIFICATION OF SLUMP FLOW AND VISUAL STABILITY INDEX (VSI) AS DELIVERED TO THE PROJECT SITE IN ACCORDANCE WITH ARTICLE 1.5.B.1.b.3 FOR SELF CONSOLIDATING GROUT.

MINIMUM SPECIAL INSPECTION		
TYPE	CONTINUOUS SPECIAL INSPECTION	PERIODIC SPECIAL INSPECTION
1. VERIFY COMPLIANCE WITH THE APPROVED SUBMITTALS	—	X
2. VERIFY THAT THE FOLLOWING ARE IN COMPLIANCE:		
A. PROPORTIONS OF SITE-MIXED MORTAR AND GROUT.	—	X
B. GRADE, TYPE, AND SIZE OF REINFORCEMENT AND ANCHOR BOLTS.	—	X
C. PLACEMENT OF MASONRY UNITS AND CONSTRUCTION OF MORTAR JOINTS.	—	X
D. PLACEMENT OF REINFORCEMENT AND CONNECTORS	X	—
E. GROUT SPACE PRIOR TO GROUTING	X	—
F. PLACEMENT OF GROUT.	X	—
G. SIZE AND LOCATION OF STRUCTURAL ELEMENTS.	—	X
H. TYPE, SIZE, AND LOCATIONS OF ANCHORS INCLUDING OTHER DETAILS OF ANCHORAGE OF MASONRY TO STRUCTURAL MEMBERS, FRAMES, OR OTHER CONSTRUCTION.	X	—
I. WELDING OF REINFORCEMENT.	X	—
J. PREPARATION, CONSTRUCTION, AND PROTECTION OF MASONRY DURING COLD WEATHER (TEMPERATURE BELOW 40° F) OR HOT WEATHER (TEMPERATURE ABOVE 90° F)	—	X
3. OBSERVE PREPARATION OF GROUT SPECIMENS, MORTAR SPECIMENS, AND/OR PRISMS.	X	—

TABLE 2 STATEMENT OF SPECIAL INSPECTIONS FOR STRUCTURAL DISCIPLINE

REQUIRED SPECIAL INSPECTIONS AND TESTS OF STRUCTURAL STEEL CONSTRUCTION		
TYPE	PERFORM	OBSERVE
1. INSPECTION TASKS PRIOR TO WELDING:		
A. WELDER QUALIFICATION RECORDS AND CONTINUITY RECORDS.	—	X
B. WELDING PROCEDURE SPECIFICATIONS (WPS) AVAILABLE.	X	—
C. MANUFACTURER CERTIFICATIONS FOR WELDING CONSUMABLES AVAILABLE.	X	—
D. MATERIAL IDENTIFICATION (TYPE/GRADE)	—	X
E. WELDER IDENTIFICATION SYSTEM.	—	X
F. FIT-UP OF GROOVE WELDS (INCLUDING JOINT GEOMETRY):		
• JOINT PREPARATIONS.	—	X
• DIMENSIONS (ALIGNMENT, ROOT OPENING, ROOT FACE, BEVEL.	—	X
• CLEANLINESS (CONDITION OF STEEL SURFACES).	—	X
• TACKING (TACK WELD QUALITY AND LOCATION).	—	X
• BACKING TYPE AND FIT (IF APPLICABLE).	—	X
G. FIT-UP OF CJP GROOVE WELDS OF HSS T-, Y-, AND K-JOINTS WITHOUT BACKING (INCLUDING JOINT GEOMETRY):		
• JOINT PREPARATIONS.	—	X
• DIMENSIONS (ALIGNMENT, ROOT OPENING, ROOT FACE, BEVEL.	—	X
• CLEANLINESS (CONDITION OF STEEL SURFACES).	—	X
• TACKING (TACK WELD QUALITY AND LOCATION).	—	X
H. CONFIGURATION AND FINISH OF ACCESS HOLES.	—	X
I. FIT-UP OF FILLET WELDS:		
• DIMENSIONS (ALIGNMENT, ROOT OPENING, ROOT FACE, BEVEL.	—	X
• CLEANLINESS (CONDITION OF STEEL SURFACES).	—	X
• TACKING (TACK WELD QUALITY AND LOCATION).	—	X
2. INSPECTION TASKS DURING WELDING:		
A. CONTROL AND HANDLING OF WELDING CONSUMABLES.		
• PACKAGING	—	X
• EXPOSURE CONTROL	—	X
B. NO WELDING OVER CRACKED TACK WELDS.	—	X
C. ENVIRONMENTAL CONDITIONS:		
• WIND SPEED WITHIN LIMITS	—	X
• PRECIPITATION AND TEMPERATURE	—	X
D. WPS FOLLOWED:		
• SETTINGS ON WELDING EQUIPMENT	—	X
• TRAVEL SPEED	—	X
• SELECTED WELDING MATERIALS	—	X
• SHIELDING GAS TYPE/FLOW RATE	—	X
• PREHEAT APPLIED	—	X
• INTERPASS TEMPERATURE MAINTAINED (MIN./MAX.)	—	X
• PROPER POSITION (F, V, H, OH)	—	X
• TRAVEL SPEED	—	X
E. WELDING TECHNIQUES		
• INTERPASS AND FINAL CLEANING	—	X
• EACH PASS WITHIN PROFILE LIMITATIONS	—	X
• EACH PASS MEETS QUALITY REQUIREMENTS	—	X
F. PLACEMENT AND INSTALLATION OF STEEL HEADED STUD ANCHORS	X	—
3. INSPECTION TASKS AFTER WELDING:		
A. WELDS CLEANED	—	X
B. SIZE, LENGTH, AND LOCATION OF WELDS	X	—
C. WELDS MEET VISUAL ACCEPTANCE CRITERIA:		
• CRACK PROHIBITION	X	—
• WELD IBASE-METAL FUSION	X	—
• CRATER CROSS SECTION	X	—
• WELD PROFILES	X	—
• WELD SIZE	X	—
• UNDERCUT	X	—
• POROSITY	X	—
D. ARC STRIKES.	X	—
E. K-AREA	X	—
F. WELD ACCESS HOLES IN ROLLED HEAVY SHAPES AND BUILT-UP HEAVY SHAPES.	X	—
G. BACKING REMOVED AND WELD TABS REMOVED (IF REQUIRED).	X	—
H. REPAIR ACTIVITIES.	X	—
I. DOCUMENT ACCEPTANCE OR REJECTION OF WELDED JOINT OR MEMBER.	X	—
J. NO PROHIBITED WELDS HAVE BEEN ADDED WITHOUT THE APPROVAL OF THE EOR.	—	X
K. NON-DESTRUCTIVE TESTING FOR COMPLETE-JOINT-PENETRATION (CJP) WELDS:		
• UT SHALL BE PERFORMED ON ALL CJP JOINTS IN MATERIAL 5/16 " AND GREATER.	X	—
4. INSPECTION TASKS AFTER BOLTING:		
A. DOCUMENT ACCEPTANCE OR REJECTION OF BOLTED CONNECTIONS.	X	—
5. ANCHOR ROD PLACEMENT:		
A. INSPECTION DURING PLACEMENT OF ANCHOR RODS AND OTHER EMBEDMENTS SUPPORTING STRUCTURAL STEEL FOR COMPLIANCE WITH THE CONSTRUCTION DOCUMENTS (ANCHOR DIAMETER, GRADE, TYPE, AND LENGTH OF THE ANCHOR ROD OR EMBEDED ITEM AND THE EXTENT OR DEPTH OF EMBEDMENT INTO THE CONCRETE) PRIOR TO PLACEMENT OF CONCRETE.	—	X
6. INSPECTION OF THE FABRICATED STEEL OR ERECTED STEEL FRAME IN COMPLIANCE WITH THE DETAILS SHOWN ON THE CONSTRUCTION DOCUMENTS.	—	X

STRUCTURAL STEEL INSPECTION NOTES:
1. "PERFORM" — THESE TASKS SHALL BE PERFORMED FOR EACH WELDED/BOLTED JOINT OR MEMBER
2. "OBSERVE" — THE INSPECTOR SHALL OBSERVE THESE ITEMS ON A RANDOM BASIS. OPERATIONS NEED NOT BE DELAYED PENDING THESE.

LAP SPLICE SCHEDULE FOR CONCRETE REINFORCING

3,000 psi & 3,500 psi CONCRETE UNCOATED REINFORCING BARS

BAR SIZE	3/4" CLR.		1 1/2" CLR. AND GREATER	
#4	3'-1"	2'-4"	3'-1"	2'-4"
#5	3'-10"	3'-0"	3'-10"	3'-0"
#6	4'-8"	3'-7"	4'-8"	3'-7"
#7	7'-6"	5'-9"	6'-9"	5'-2"
#8	9'-3"	7'-1"	7'-9"	5'-11"
#9	11'-2"	8'-7"	8'-8"	6'-8"
#10	13'-6"	10'-4"	9'-10"	7'-6"
#11	15'-10"	12'-2"	10'-11"	8'-4"

LAP SPLICE SCHEDULE FOR CONCRETE REINFORCING

4,000 psi & 4,500 psi CONCRETE UNCOATED REINFORCING BARS

BAR SIZE	3/4" CLR.		1 1/2" CLR. AND GREATER	
#4	2'-8"	2'-1"	2'-8"	2'-1"
#5	3'-4"	2'-7"	3'-4"	2'-7"
#6	4'-0"	3'-1"	4'-0"	3'-1"
#7	6'-6"	5'-0"	5'-10"	4'-6"
#8	8'-0"	6'-2"	6'-8"	5'-2"
#9	9'-8"	7'-6"	7'-6"	5'-10"
#10	11'-8"	9'-0"	8'-6"	6'-6"
#11	13'-8"	10'-6"	9'-5"	7'-3"

REINFORCING COVER/TOLERANCE (#3 - #11 BARS)

EXPOSURE CONDITION	MIN. COVER (U.N.O.)	PLACEMENT TOLERANCE
CAST AGAINST AND PERMANENTLY EXPOSED TO EARTH:	3"	0", +3"
EXPOSED TO EARTH OR WEATHER - #5 AND SMALLER BARS: - #6 AND LARGER BARS:	1-1/2" 2"	-1/4", +1/2" -1/4", +1/2"
NEITHER EXPOSED TO WEATHER, NOR IN CONTACT WITH GROUND - SLABS AND WALLS: - BEAMS, COLUMNS, & PIERS: (TO TIES OR STIRRUPS)	3/4" 1-1/2"	-1/4", +3/8" -1/4", +1/2"

"-" INDICATES TOLERANCE TOWARDS MEMBER FACE.
"+" INDICATES TOLERANCE AWAY FROM MEMBER FACE.

1. TOP BARS / OTHER BARS — TOP BARS ARE DEFINED AS HORIZONTAL BARS WITH MORE THAN 12" OF CONCRETE CAST BELOW THE BAR.
2. BAR SPACING TO BE A MINIMUM OF THREE DIAMETERS UNLESS NOTED OR SCHEDULED OTHERWISE.
3. APPLICABLE ONLY FOR 60 KSI STEEL AND NORMAL WEIGHT CONCRETE.
4. IN LIEU OF LAP SPLICING, BARS MAY BE SPLICED BY MECHANICAL MEANS WHICH DEVELOP AT LEAST 125% OF THE BAR'S SPECIFIED YIELD STRENGTH.

LAP SPLICE SCHEDULE FOR MASONRY REINFORCING

f'm = 2,250 psi	BAR CENTERED IN WALL d = t/2			
	ld (in)			
BAR #	8" CMU	10" CMU	12" CMU	14" CMU
#3	1'-0"	1'-0"	1'-0"	1'-0"
#4	1'-1"	1'-0"	1'-0"	1'-0"
#5	1'-7"	1'-3"	1'-0"	1'-0"
#6	2'-11"	2'-4"	1'-11"	1'-7"
#7	4'-1"	3'-2"	2'-7"	2'-2"
#8	6'-3"*	4'-10"	3'-11"	3'-4"
#9	-	6'-2"*	5'-0"*	4'-3"

1. " * " INDICATES LAP LENGTH GREATER THAN MAXIMUM ALLOWABLE HEIGHT OF 5'-0" FOR LOW-LIFT GROUTING.
2. APPLICABLE ONLY FOR BARS CENTERED IN MASONRY CELL.
3. APPLICABLE ONLY FOR 60 KSI STEEL AND ASTM C90 BLOCK.

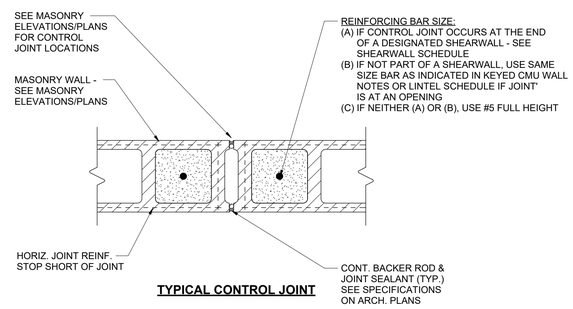

TYPICAL CONTROL JOINT

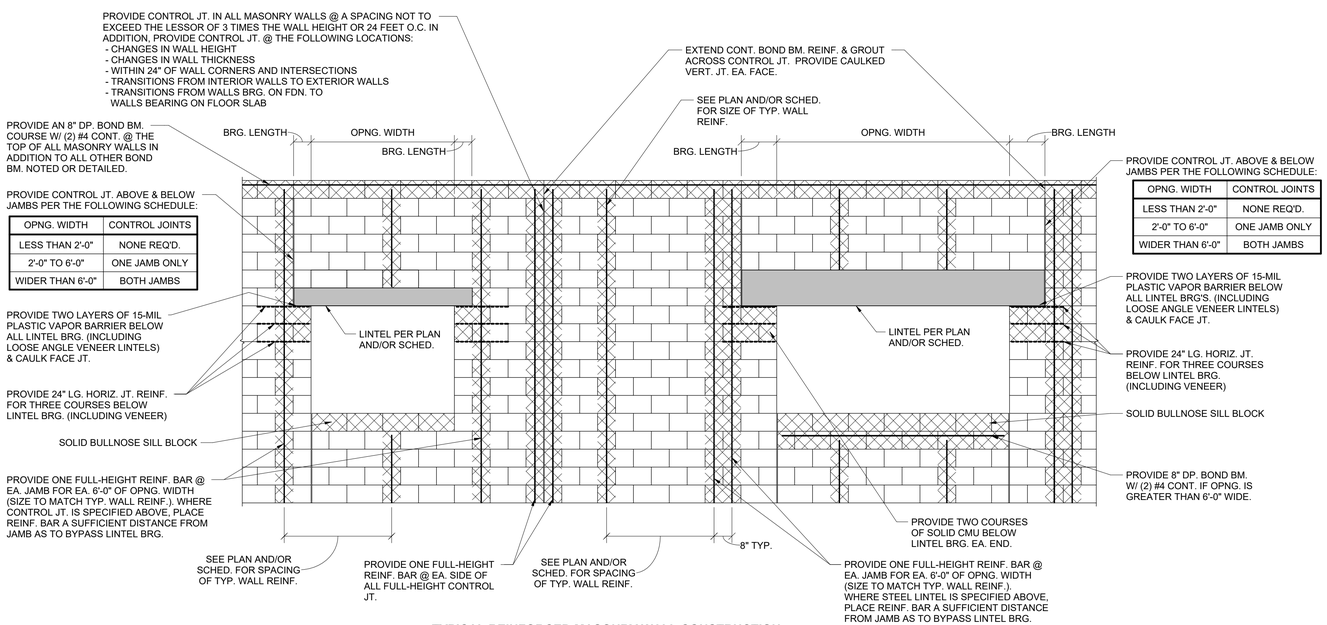

OPNG. WIDTH	CONTROL JOINTS
LESS THAN 2'-0"	NONE REQ'D.
2'-0" TO 6'-0"	ONE JAMB ONLY
WIDER THAN 6'-0"	BOTH JAMBS

TYPICAL REINFORCED MASONRY WALL CONSTRUCTION

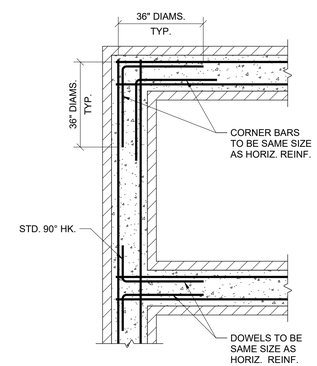

TYPICAL CORNER BARS FOR MASONRY BOND BEAMS

Consultant:
Jezerinac Geers Structural Engineering
Jezerinac Geers & Associates, Inc.
5640 Frantz Road, Dublin, OH 43017
614.766.0066, fax 614.766.1223
www.jgaeng.com

BID DOCUMENTS ONLY NOT FOR CONSTRUCTION

COPYRIGHT 2026
ALL DRAWINGS AND SPECIFICATIONS SHALL REMAIN THE PROPERTY OF RED ARCHITECTURE LLC AND MAY NOT BE USED, DUPLICATED, OR ALTERED WITHOUT WRITTEN CONSENT OF THE ARCHITECT.

ECP PARTNERS

CMG HIGHLAND CITY SHELL, FL
TBD US 98
LAKELAND, FL 33812

Issue Record:

02/25/26	PERMIT SET
02/25/26	BID SET

Revisions:

Drawn: CMS
Checked: LG

Project No. 26.34.308

Contents: SPECIAL INSPECTIONS

S001

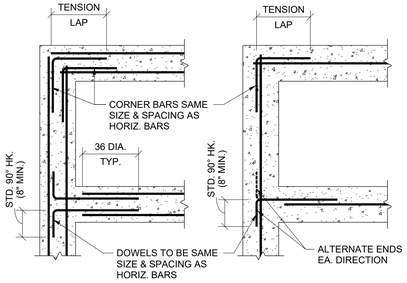

TYPICAL CORNER BARS FOR CONCRETE WALL AND FOOTING CONSTRUCTION

SECTION 1 — 3/4" = 1'-0"

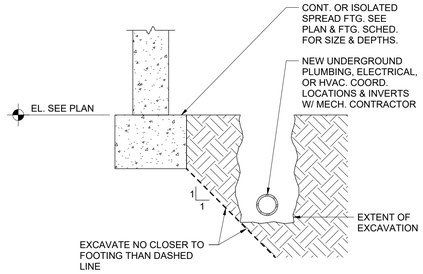

TYPICAL EXCAVATION CLEARANCE REQUIREMENTS AT NEW UNDERGROUND WORK

SECTION 2 — 3/4" = 1'-0"

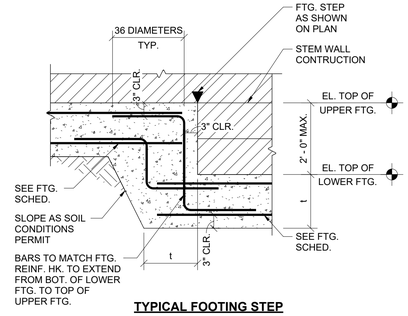

TYPICAL FOOTING STEP

SECTION 3 — 3/4" = 1'-0"

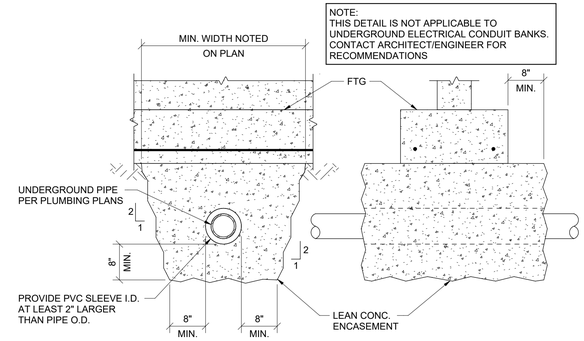

TYPICAL PIPE BELOW FOOTING

SECTION 4 — 3/4" = 1'-0"

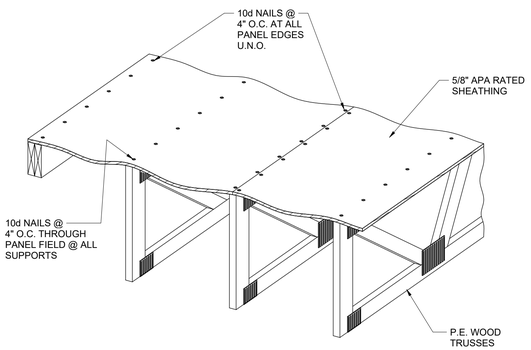

TYPICAL DIAPHRAGM NAILING

SECTION 5 — 3/4" = 1'-0"

MASONRY LINTELS

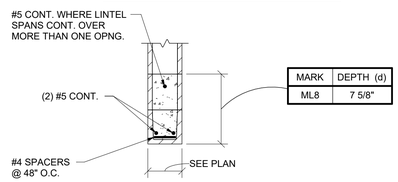

MARK	DEPTH (d)
ML8	7 5/8"

ML(d)

MASONRY LINTEL NOTES

1. FILL IS 2500 PSI (MINIMUM) GROUT. USE FINE GROUT FOR WALLS 6 INCHES AND LESS.
2. LINTELS SHALL BEAR ON SOLID CMU OR ON 2 FILLED COURSES.
3. MAXIMUM SPANS DO NOT APPLY TO LOAD BEARING WALLS.
4. BOND PATTERN OF LINTEL TO MATCH THAT OF SURROUNDING WALL.
5. BOTTOM OF LINTEL SHALL BE SMOOTH MASONRY WITH NO CORES EXPOSED.
6. PROVIDE 8" MINIMUM BEARING EACH END FOR 8" AND 16" DEEP LINTELS. USE 16" MINIMUM BEARING FOR 24" (AND DEEPER) LINTELS.
7. PROVIDE SCORED BLOCK AS REQUIRED TO MATCH ADJACENT WALL FINISH. REFER TO INTERIOR FINISH SCHEDULE FOR LOCATION OF ALL SCORED BLOCK.
8. PROVIDE TWO LAYERS OF 15-MIL PLASTIC VAPOR BARRIER BELOW ALL LINTEL BEARINGS AND CAULK FACE JOINT.

SECTION 6 — 3/4" = 1'-0"

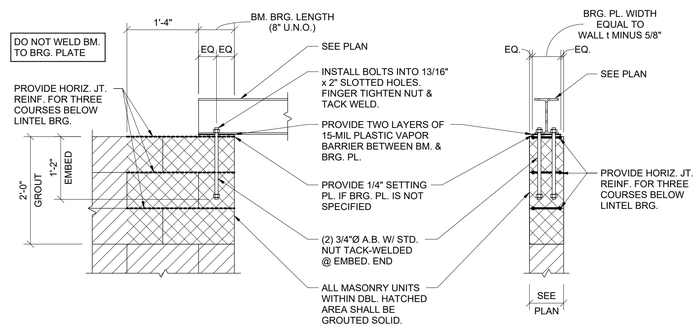

TYPICAL BEAM BEARING PARALLEL TO MASONRY WALL OR AT CORNER OF MASONRY WALL

SECTION 7 — 3/4" = 1'-0"

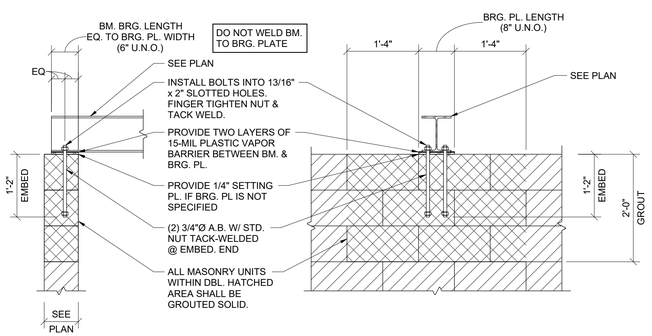

TYPICAL BEAM BEARING PERPENDICULAR TO MASONRY WALL

SECTION 8 — 3/4" = 1'-0"

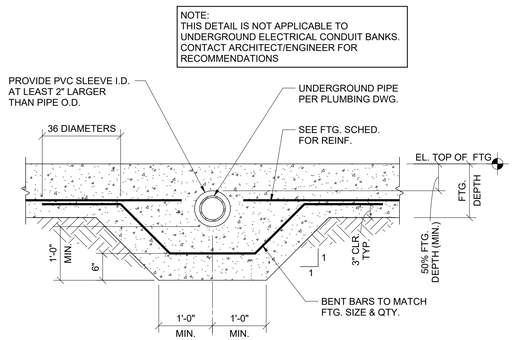

TYPICAL PIPE THROUGH FOOTING

SECTION 9 — 3/4" = 1'-0"

Consultant:

Jezerinac Geers Structural Engineering

Jezerinac Geers & Associates, Inc.
5640 Frantz Road, Dublin, OH 43017
614.766.0066, fax 614.766.1223
www.jgaeng.com

BID DOCUMENTS ONLY NOT FOR CONSTRUCTION

COPYRIGHT 2026
ALL DRAWINGS AND SPECIFICATIONS SHALL REMAIN THE PROPERTY OF RED ARCHITECTURE LLC AND MAY NOT BE USED, DUPLICATED, OR ALTERED WITHOUT WRITTEN CONSENT OF THE ARCHITECT.

ECP PARTNERS

CMG HIGHLAND CITY SHELL, FL
TBD US 98
LAKELAND, FL 33812

Issue Record:

02/25/26	PERMIT SET
02/25/26	BID SET

Revisions:

Drawn: CMS
Checked: LG

Project No. 26.34.308

Contents: TYPICAL DETAILS

S002

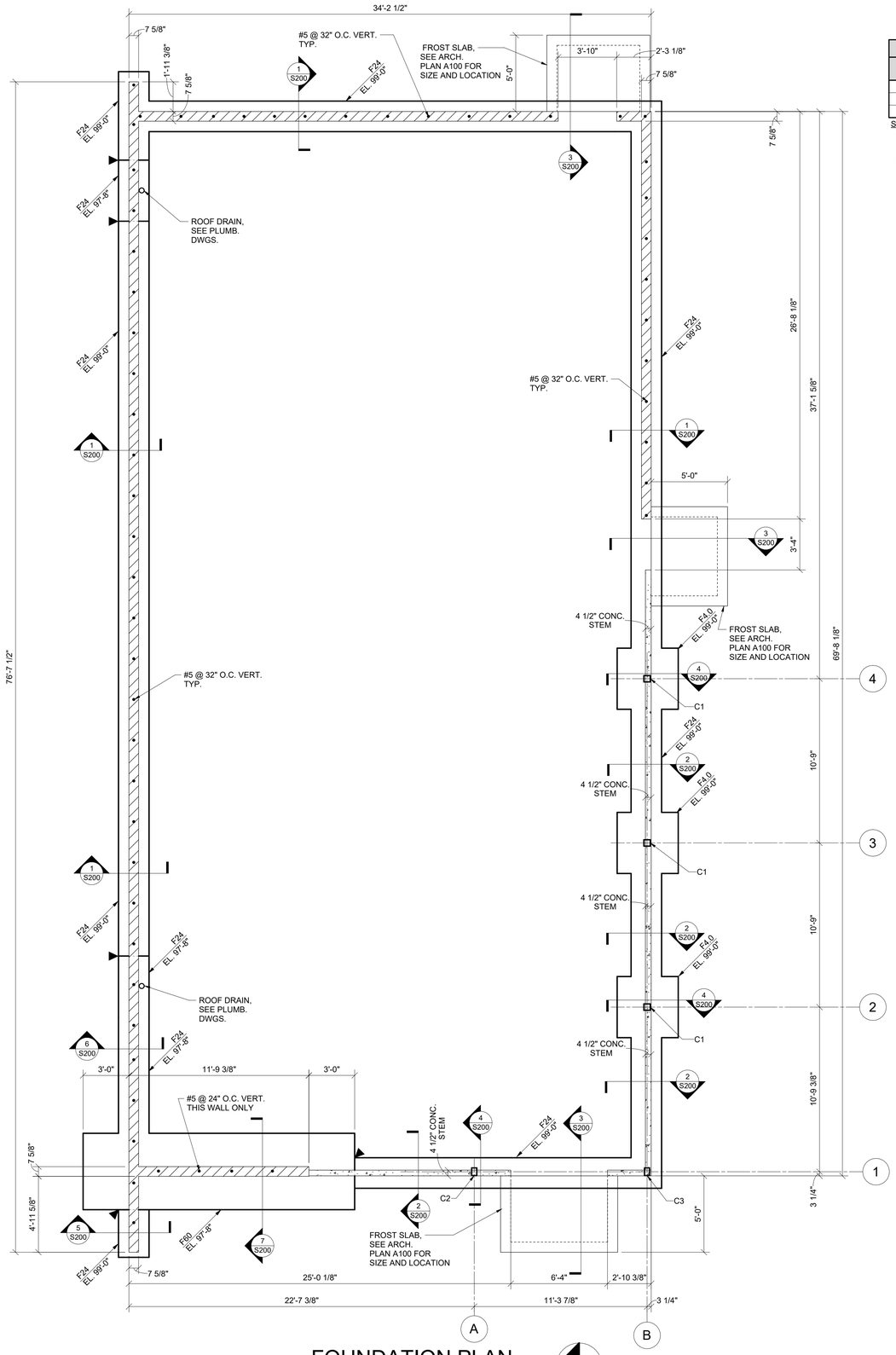

FOUNDATION PLAN

1/4" = 1'-0"

STEEL COLUMN SCHEDULE				
MARK	SIZE	BASE PLATE SIZE t x W x L	ANCHOR BOLTS	REMARKS
C1	HSS 5 x 5 x 1/4	1" x 10" x 10"	(4) 3/4" Ø x 12" LG.	TYPE A BASEPLATE
C2	HSS 9 x 5 x 3/8	1" x 17" x 9"	(4) 3/4" Ø x 18" LG.	TYPE B BASEPLATE
C3	HSS 5 x 5 x 1/4	1" x 13" x 9"	(4) 3/4" Ø x 12" LG.	TYPE B BASEPLATE

STEEL COLUMN SCHEDULE NOTES:

1. SEE GENERAL STRUCTURAL NOTES FOR STEEL MATERIAL STRENGTHS.
2. PROVIDE HEAVY, DOUBLE NUTS AT THE BASE OF ANCHORS EMBEDDED IN FOOTING OR PIER.
3. PROVIDE RECOMMENDED HEAVY WASHER SIZES WITH OVERSIZED ANCHOR ROD HOLE SIZES FOR COLUMN BASEPLATES PER AISC TABLE 14-2.

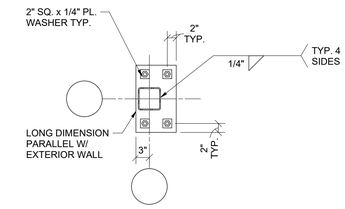

COLUMNS C1

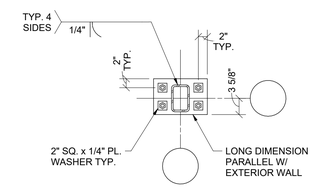

COLUMNS C2

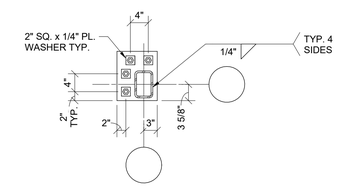

COLUMNS C3

FOUNDATION NOTES

1. DESIGN SOIL BEARING PRESSURE = 2500 PSF. SEE S000 FOR REFERENCE SOILS REPORT INFORMATION. REFERENCE THIS REPORT FOR ANY REQUIRED SITE BUILDING PAD PREPARATION PRIOR TO FOUNDATION AND/OR SLAB-ON-GRADE CONSTRUCTION. FOOTING EXCAVATIONS MAY BE REQUIRED TO EXTEND THROUGH EXISTING FILL REGIONS IN ORDER TO BEAR ON SUITABLE MATERIAL. OVER-EXCAVATIONS ARE TO BE FILLED WITH LEAN CONCRETE UP TO THE PLANNED BOTTOM OF FOOTING ELEVATION. PLACE NO CONCRETE PRIOR TO INSPECTION AND APPROVAL OF BEARING SURFACES BY SOILS ENGINEER.
2. GC SHALL PROVIDE TERMITE PROTECTION UNDER NEW SLAB TO COMPLY WITH THE FLORIDA BUILDING CODE, SECTION 1816 TERMITE PROTECTION AND ALL RELATED SECTIONS. A CERTIFICATE OF COMPLIANCE SHALL BE ISSUED TO THE DEPARTMENT AS DESCRIBED THEREIN, UPON COMPLETION OF TREATMENT.
3. KEEP FOUNDATIONS FREE OF WATER AT ALL TIMES. REPLACE WEAKENED SOIL WITH LEAN CONCRETE OR FLOWABLE FILL.
4. BOTTOM OF FOOTINGS ARE TO BE AT LEAST 12-INCHES BELOW THE ADJACENT EXTERIOR FINISHED GRADE.
5. VERIFY LOCATION, SIZE, AND NUMBER OF FLOOR DEPRESSIONS AND SLOOR SLOPES WITH ARCHITECTURAL AND MEP DRAWINGS.
6. ELEVATIONS SHOWN ON FOOTINGS INDICATE ELEVATION AT TOP OF FOOTING. REFERENCE ELEVATION/TOP OF CONCRETE SLAB ELEVATION AS NOTED ON PLANS. COORDINATE ABSOLUTE ELEVATION OF TOP OF SLAB WITH SITE DRAWINGS.
7. NOT ALL UNDERGROUND UTILITIES ARE SHOWN ON THE STRUCTURAL DRAWINGS. FOUNDATIONS BUILT PRIOR TO THE INSTALLATION OF UNDERGROUND UTILITIES ARE TO BE STEPPED OR DROPPED COMPLETELY BELOW THE UTILITY DEPTH PER SECTION 10/S002. WHERE UNDERGROUND UTILITIES ARE IN PLACE PRIOR TO FOUNDATION CONSTRUCTION, THEY ARE TO BE ENCASED PER SECTION 4/S002. SEE SECTION 2/S002 FOR TRENCH EXCAVATION AND UTILITY PLACEMENT REQUIREMENTS FOR WORK THAT IS LAID ADJACENT TO FOOTINGS.
8. PROVIDE CORNER BARS AT ALL FOOTING AND CONCRETE WALL INTERSECTIONS PER DETAIL 1/S002.
9. "Cx" INDICATES COLUMN TYPE PER COLUMN SCHEDULE.
10. ▼ DENOTES STEP IN FOUNDATIONS. SEE DETAIL 3/S002 FOR TYPICAL STEP DETAIL.
11. SEE SHEET S000 FOR GENERAL STRUCTURAL INFORMATION.

CONT. WALL FOOTING SCHEDULE		
MARK	SIZE	REINFORCING
F24	2'-0" x 1'-0" DP.	(2) #6 CONT. TOP & BOTTOM
F60	5'-0" x 1'-6" DP.	(4) #5 CONT. L.W. TOP & BOTTOM; #5 @ 16" O.C. S.W. BOT.

SPREAD FOOTING SCHEDULE		
MARK	SIZE	REINFORCING
F4.0	4'-0" x 4'-0" x 1'-0" DP.	(4) #5 EA. WAY BOTTOM

Consultant:

Jezerinac Geers Structural Engineering

Jezerinac Geers & Associates, Inc.
5640 Frantz Road, Dublin, OH 43017
614.766.0066, fax 614.766.1223
www.jgaeng.com

BID DOCUMENTS ONLY NOT FOR CONSTRUCTION

COPYRIGHT 2026
ALL DRAWINGS AND SPECIFICATIONS SHALL REMAIN THE PROPERTY OF RED ARCHITECTURE LLC AND MAY NOT BE USED, DUPLICATED, OR ALTERED WITHOUT WRITTEN CONSENT OF THE ARCHITECT.

ECP PARTNERS

CMG HIGHLAND CITY SHELL, FL
TBD US 98
LAKELAND, FL 33812

Issue Record:

02/25/26	PERMIT SET
02/25/26	BID SET

Revisions:

Drawn: CMS

Checked: LG

Project No. 26.34.308

Contents: FOUNDATION PLAN

S100

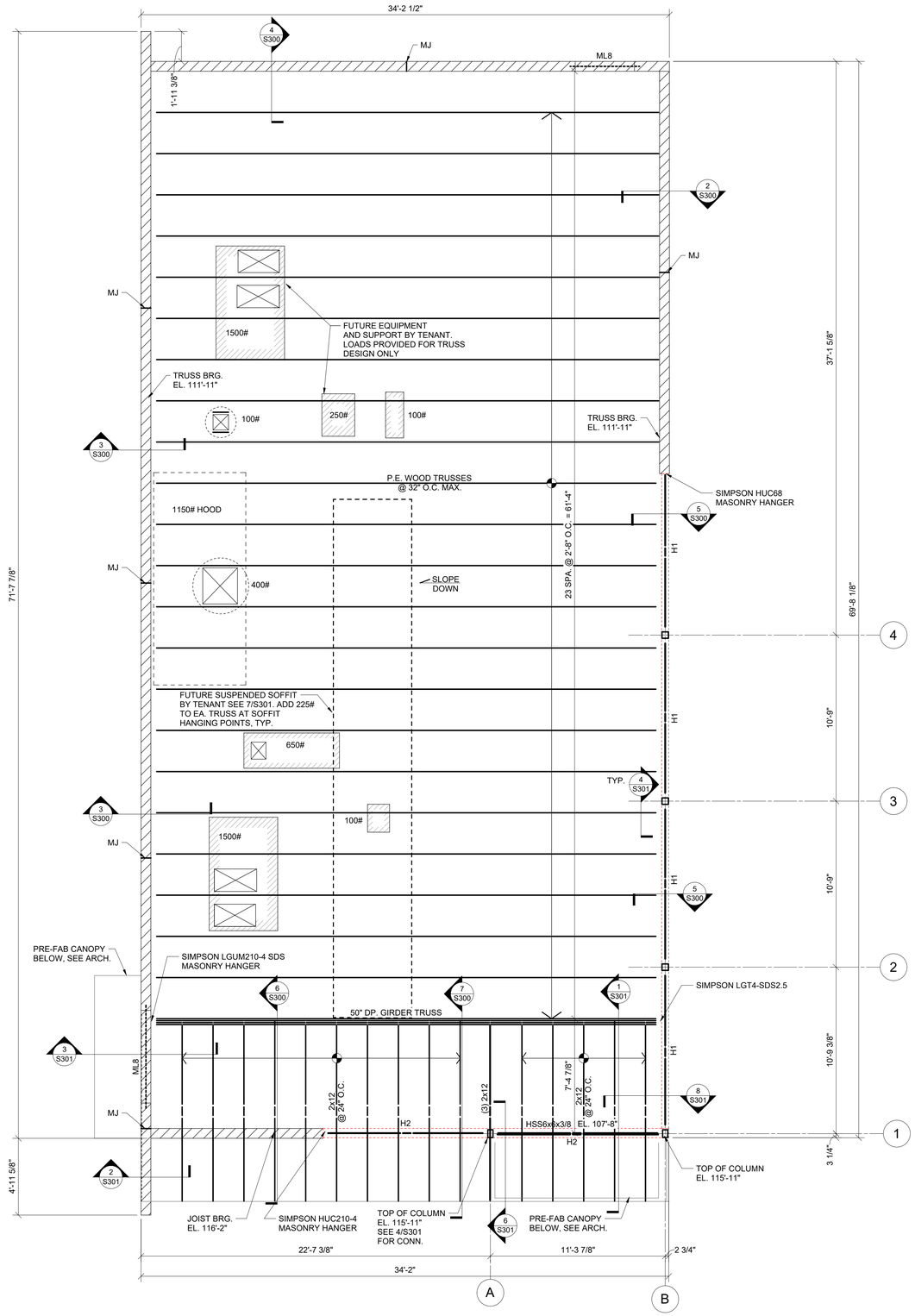

ROOF FRAMING PLAN

1/4" = 1'-0"

WOOD HEADER SCHEDULE	
MARK	SIZE
H1	(3) 1.75" x 9.5" LVL
H2	(4) 2x12

HEADER SCHEDULE NOTES:

1. SEE GENERAL STRUCTURAL NOTES FOR MINIMUM LUMBER GRADES FOR HEADER FRAMING, U.N.O.
2. SEE SECTION 4/S301 FOR WOOD HEADERS SUPPORTED BY STEEL COLUMNS.
3. SEE GENERAL STRUCTURAL NOTES FOR MINIMUM STRUCTURAL COMPOSITE LUMBER DESIGN VALUES.

ROOF FRAMING NOTES

1. DESIGN LIVE LOADS:

FLAT ROOF LIVE	20 PSF
WIND (ASD NET UPLIFT)	25 PSF
MECHANICAL LIVE	AS SHOWN

2. ROOF CONSTRUCTION:

   5/8" NOMINAL APA RATED SHEATHING ON PRE-ENGINEERED WOOD TRUSSES OR 2x FRAMING WITH (2) PANEL CLIPS BETWEEN TRUSSES. UNLESS NOTED OTHERWISE. FASTEN SHEATHING TO SUPPORTS AS INDICATED IN THE GENERAL STRUCTURAL NOTES AND DETAIL 6/S002.

3. INDICATES FUTURE ROOF OPENING. NOT ALL OPENINGS ARE SHOWN ON THE STRUCTURAL DRAWINGS. NOTIFY THE ARCHITECT BEFORE PROCEEDING IF OPENINGS CANNOT BE FIT BETWEEN FRAMING MEMBERS.
4. WT# INDICATES FUTURE TENANT MECHANICAL LOAD SUPPORTED ON ROOF. COORDINATE FINAL SIZE, WEIGHT, LOCATION, AND OPENING REQUIREMENTS WITH TENANT MECHANICAL CONTRACTOR. TOLERANCE FOR LOCATION OF ACTUAL UNIT IS 3 FEET IN ANY DIRECTION FROM WHERE SHOWN ON THE STRUCTURAL DRAWINGS. WOOD TRUSSES ARE TO BE DESIGNED TO ACCOMMODATE LOADING.
5. TRUSS BEARING ELEVATION = 111'-10" UNLESS NOTED OTHERWISE. REFERENCE ELEVATION 100'-0" = TOP OF FIRST FLOOR SLAB ON GRADE.
6. SEE SHEET S100 FOR COLUMN SCHEDULE.
7. INDICATES MASONRY LINTEL FOR WALL OPENINGS PER SCHEDULE. SEE ARCHITECTURAL DRAWINGS FOR OPENING SIZES, DETAILS 7/S002 FOR MASONRY LINTEL TYPE AND SCHEDULE, AND SHEET S001 FOR STANDARD HEADER CONSTRUCTION.
8. SEE ARCHITECTURAL DRAWINGS FOR ANY DIMENSIONS NOT INDICATED HEREIN.
9. SEE SHEET S000 FOR GENERAL STRUCTURAL INFORMATION.

Consultant:

Jezerinac Geers Structural Engineering

Jezerinac Geers & Associates, Inc.
5640 Frantz Road, Dublin, OH 43017
614.766.0066, fax 614.766.1223
www.jgaeng.com

BID DOCUMENTS ONLY NOT FOR CONSTRUCTION

COPYRIGHT 2026
ALL DRAWINGS AND SPECIFICATIONS SHALL REMAIN THE PROPERTY OF RED ARCHITECTURE LLC AND MAY NOT BE USED, DUPLICATED, OR ALTERED WITHOUT WRITTEN CONSENT OF THE ARCHITECT.

ECP PARTNERS

CMG HIGHLAND CITY SHELL, FL
TBD US 98
LAKELAND, FL 33812

Issue Record:

02/25/26	PERMIT SET
02/25/26	BID SET

Revisions:

Drawn: CMS
Checked: LG

Project No. 26.34.308

Contents: ROOF FRAMING PLAN

S110

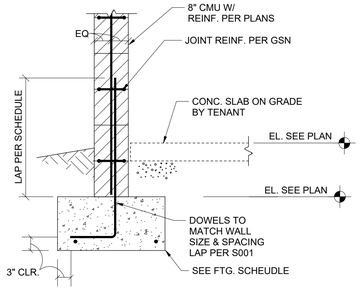

SECTION 1
3/4" = 1'-0"

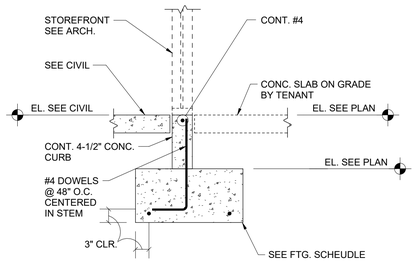

SECTION 2
3/4" = 1'-0"

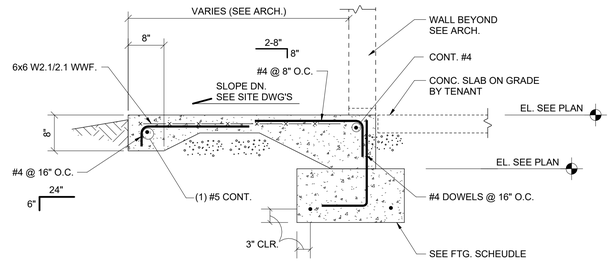

SECTION 3
3/4" = 1'-0"

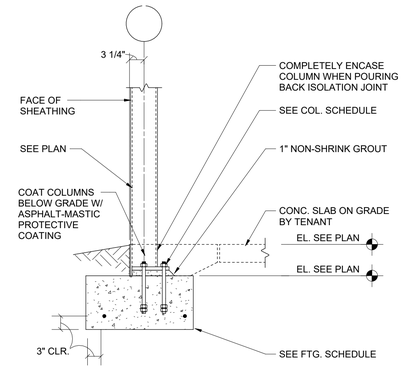

SECTION 4
3/4" = 1'-0"

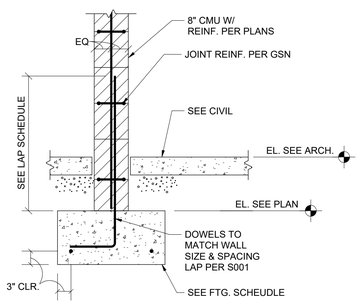

SECTION 5
3/4" = 1'-0"

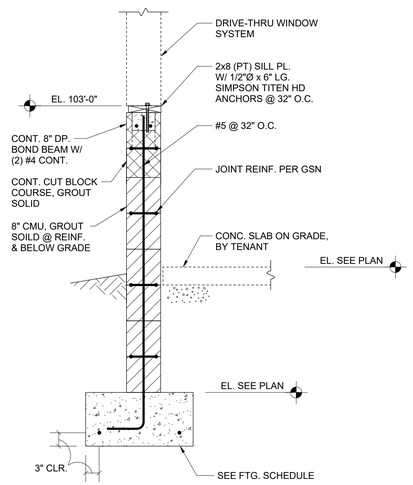

SECTION 6
3/4" = 1'-0"

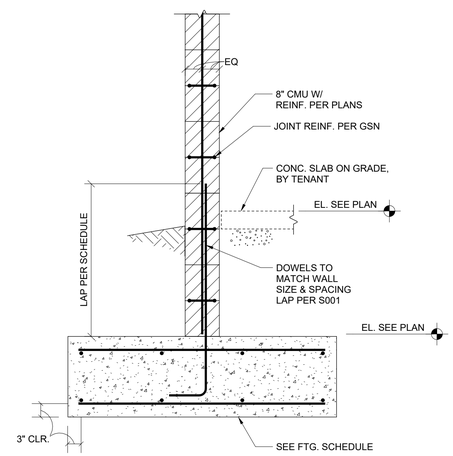

SECTION 7
3/4" = 1'-0"

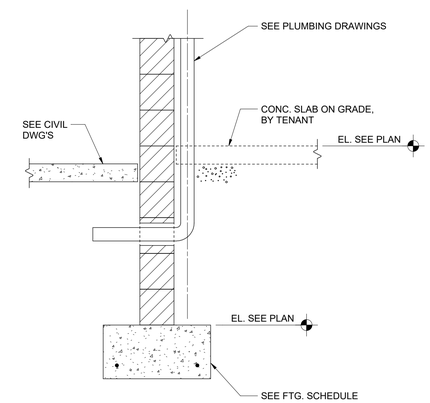

SECTION 8
3/4" = 1'-0"

Consultant:

Jezerinac Geers
Structural Engineering

Jezerinac Geers & Associates, Inc.
5640 Frantz Road, Dublin, OH 43017
614.766.0066, fax 614.766.1223
www.jgaeng.com

BID DOCUMENTS
ONLY NOT FOR
CONSTRUCTION

COPYRIGHT 2026
ALL DRAWINGS AND SPECIFICATIONS SHALL
REMAIN THE PROPERTY OF RED ARCHITECTURE LLC
AND MAY NOT BE USED, DUPLICATED, OR ALTERED
WITHOUT WRITTEN CONSENT OF THE ARCHITECT.

ECP
PARTNERS

CMG HIGHLAND CITY SHELL, FL
TBD US 98
LAKELAND, FL 33812

Issue Record:

02/25/26	PERMIT SET
02/25/26	BID SET

Revisions:

Drawn: CMS
Checked: LG

Project No.
26.34.308

Contents:

FOUNDATION
DETAILS

S200

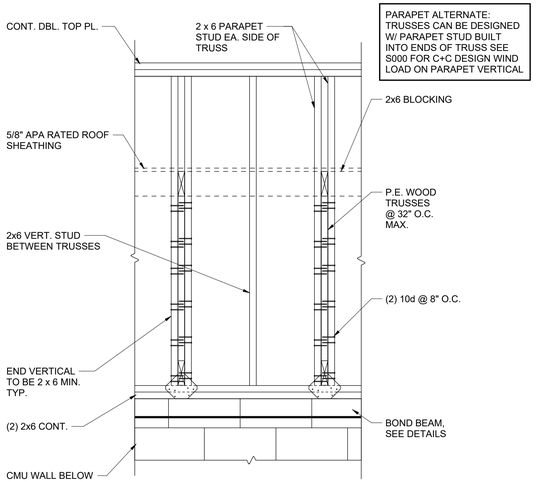

DETAIL 1
3/4" = 1'-0"

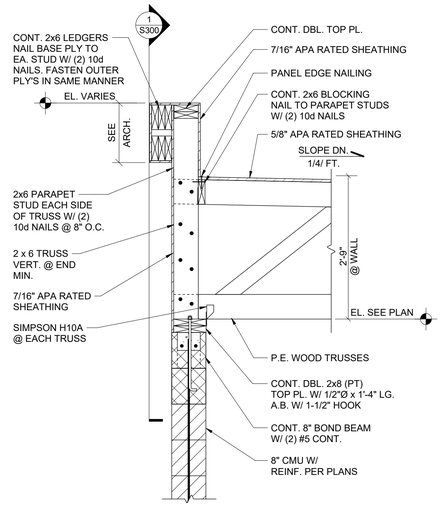

SECTION 2
3/4" = 1'-0"

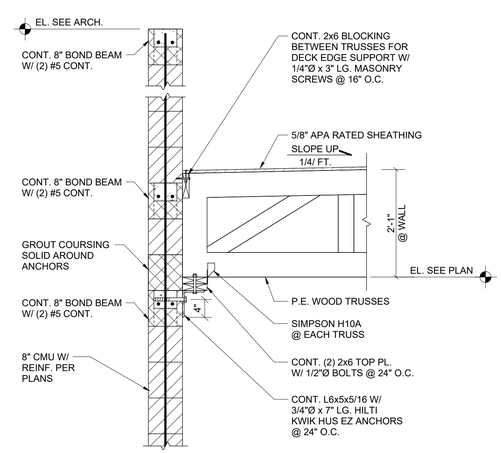

SECTION 3
3/4" = 1'-0"

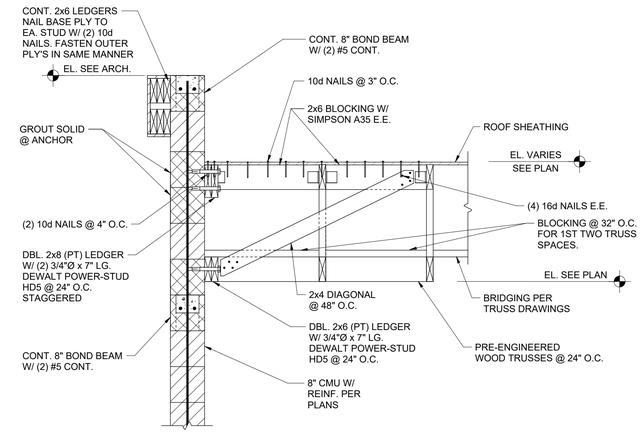

SECTION 4
3/4" = 1'-0"

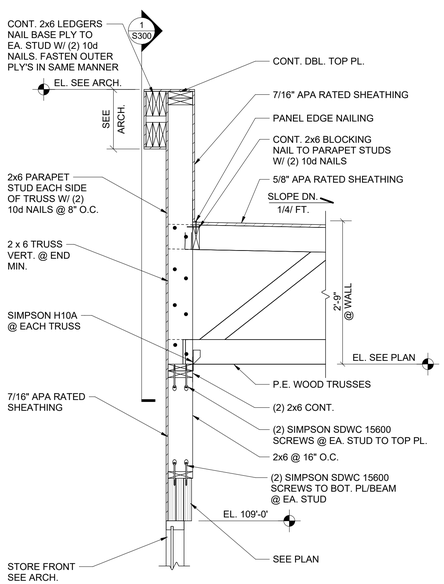

SECTION 5
3/4" = 1'-0"

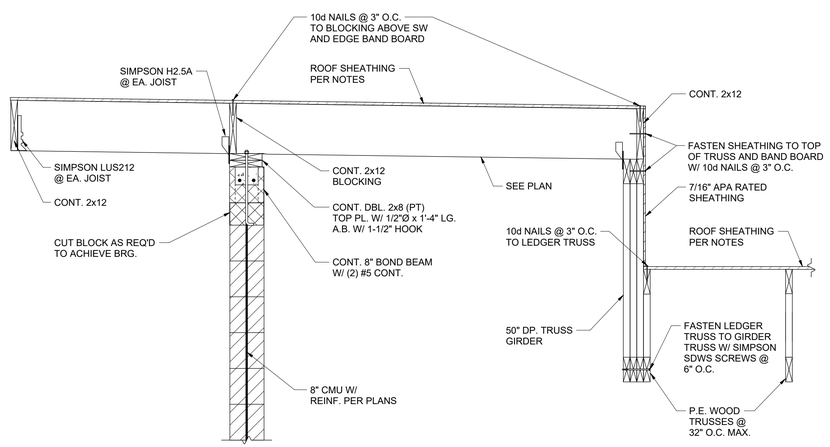

SECTION 6
3/4" = 1'-0"

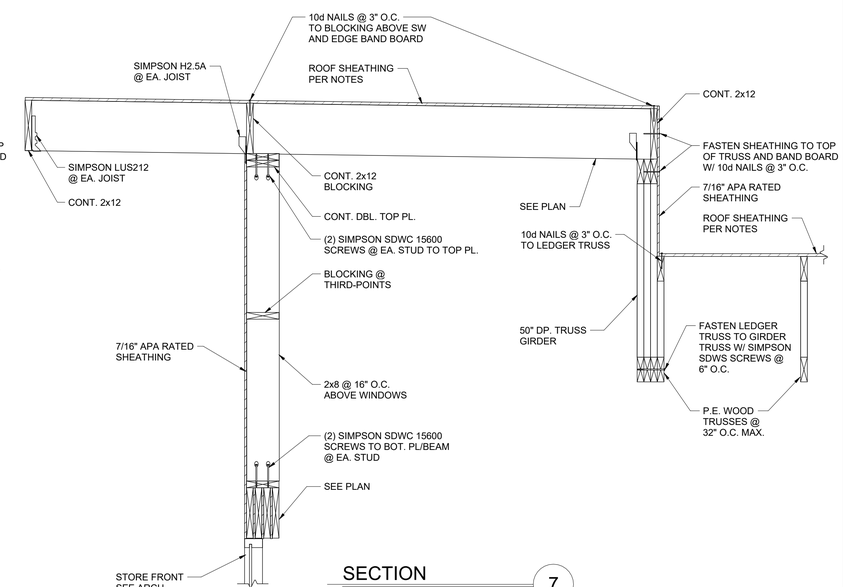

SECTION 7
3/4" = 1'-0"

Consultant:

Jezerinac Geers Structural Engineering

Jezerinac Geers & Associates, Inc.
5640 Frantz Road, Dublin, OH 43017
614.766.0066, fax 614.766.1223
www.jgaeng.com

BID DOCUMENTS ONLY NOT FOR CONSTRUCTION

COPYRIGHT 2026
ALL DRAWINGS AND SPECIFICATIONS SHALL REMAIN THE PROPERTY OF RED ARCHITECTURE LLC AND MAY NOT BE USED, DUPLICATED, OR ALTERED WITHOUT WRITTEN CONSENT OF THE ARCHITECT.

ECP PARTNERS

CMG HIGHLAND CITY SHELL, FL
TBD US 98
LAKELAND, FL 33812

Issue Record:

02/25/26	PERMIT SET
02/25/26	BID SET

Revisions:

Drawn: CMS
Checked: LG

Project No. 26.34.308

Contents:

FRAMING DETAILS

S300

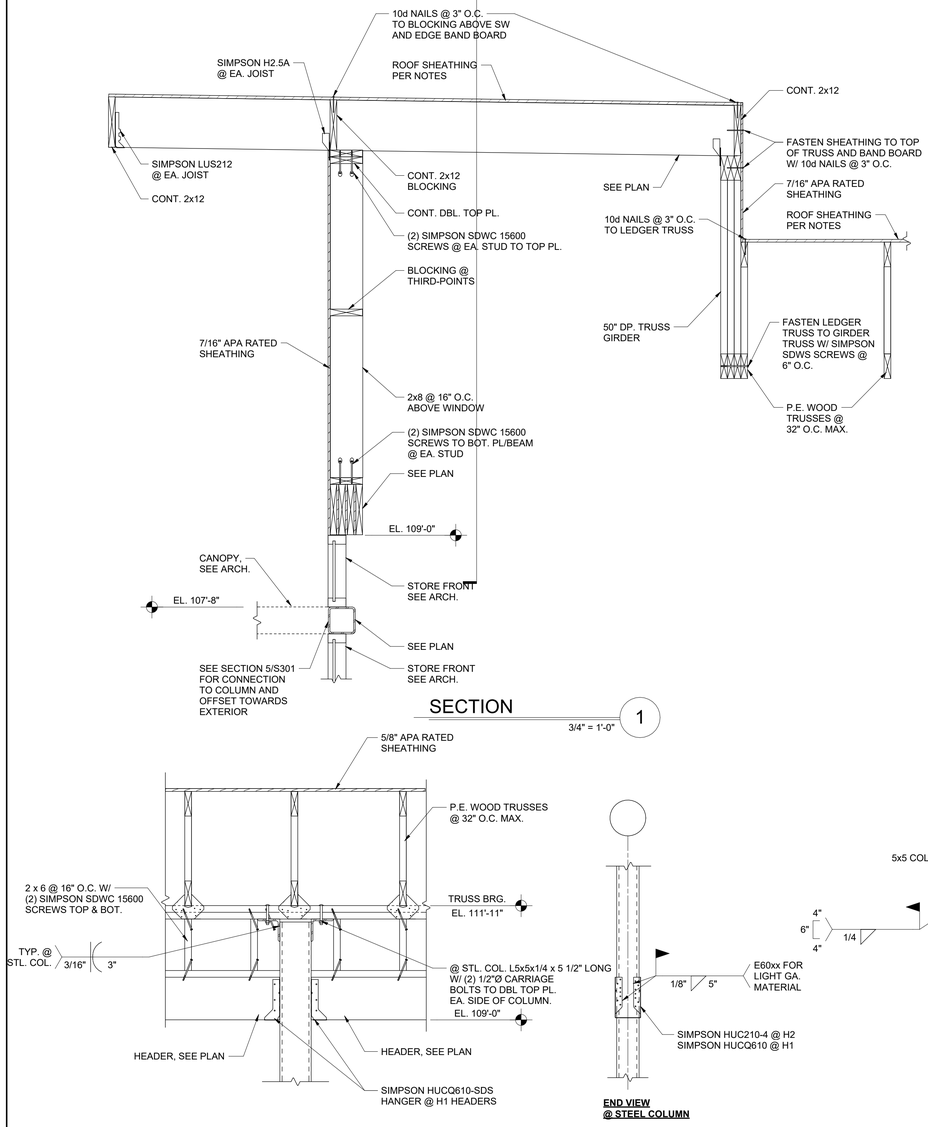

SECTION 1
3/4" = 1'-0"

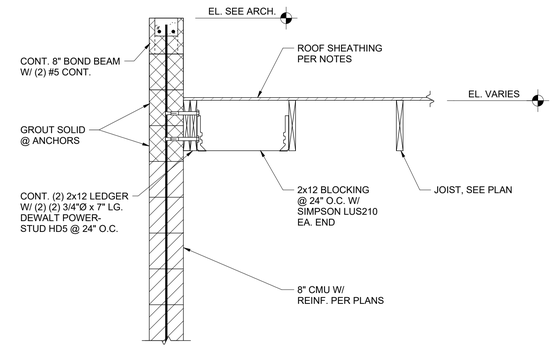

SECTION 2
3/4" = 1'-0"

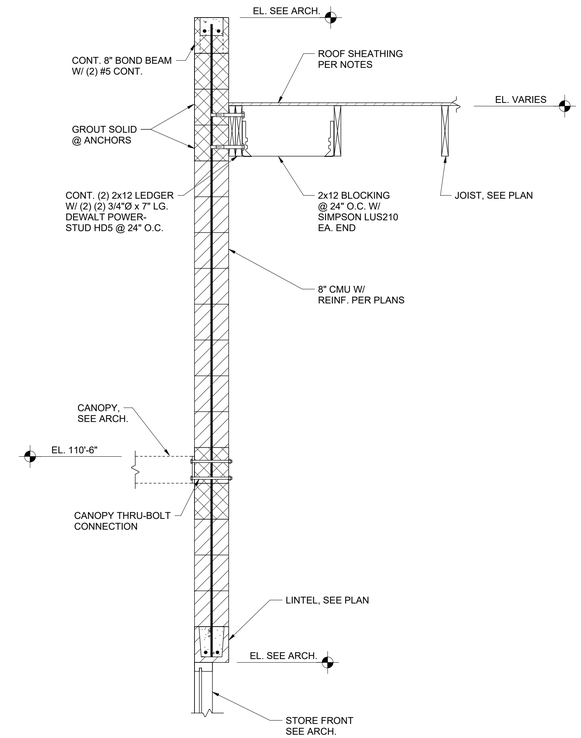

SECTION 3
3/4" = 1'-0"

SECTION 4
3/4" = 1'-0"

END VIEW
@ STEEL COLUMN

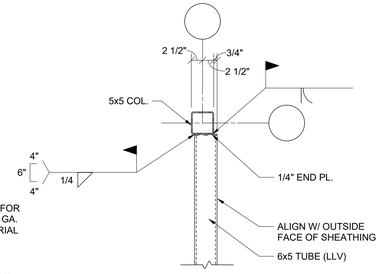

PLAN VIEW

SECTION 5
3/4" = 1'-0"

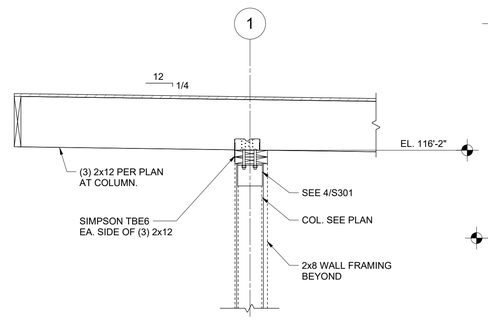

SECTION 6
3/4" = 1'-0"

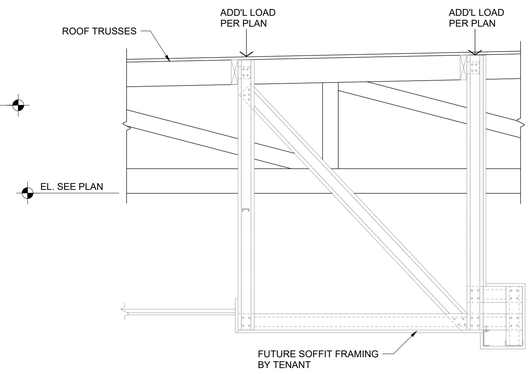

SECTION 7
3/4" = 1'-0"

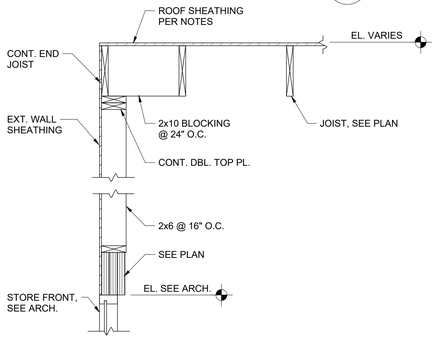

SECTION 8
3/4" = 1'-0"

Consultant:
Jezerinac Geers Structural Engineering
Jezerinac Geers & Associates, Inc.
5640 Frantz Road, Dublin, OH 43017
614.766.0066, fax 614.766.1223
www.jgaeng.com

BID DOCUMENTS ONLY NOT FOR CONSTRUCTION

COPYRIGHT 2026
ALL DRAWINGS AND SPECIFICATIONS SHALL REMAIN THE PROPERTY OF RED ARCHITECTURE LLC AND MAY NOT BE USED, DUPLICATED, OR ALTERED WITHOUT WRITTEN CONSENT OF THE ARCHITECT.

ECP PARTNERS

CMG HIGHLAND CITY SHELL, FL
TBD US 98
LAKELAND, FL 33812

Issue Record:

02/25/26	PERMIT SET
02/25/26	BID SET

Revisions:

Drawn: CMS
Checked: LG

Project No. 26.34.308

Contents:

FRAMING DETAILS

S301

PLUMBING LEGEND

—SAN—	SANITARY	—⋈—	BALANCING VALVE
-GW-	GREASE WASTE	—O—	BALL VALVE
—STM—	STORM		CONNECT TO EXISTING
— - —	DOMESTIC COLD WATER	O—	PIPE TURNED UP
	DOMESTIC HOT WATER	G—	PIPE TURNED DOWN
— G —	NATURAL GAS		FLOOR PENETRATION MARKER
— V —	VENT		EXISTING SANITARY

ABBREVIATIONS

(D)	DEMOLITION	GPM	GALLONS PER MINUTE
(E)	EXISTING	HB	HOSE BIBB
(F)	FUTURE	INV	INVERT
(R)	RELOCATE	IW	INDIRECT WASTE
AAV	AIR ADMITTANCE VALVE	LF	LINEAR FEET
ABV	ABOVE	LG	LENGTH
AFF	ABOVE FINISHED FLOOR	M	METER
AFG	ABOVE FINISHED GRADE	MAX	MAXIMUM
AUTO	AUTOMATIC	MIN	MINIMUM
AVG	AVERAGE	N/A	NOT APPLICABLE
BFF	BELOW FINISHED FLOOR	NTS	NOT TO SCALE
BFP	BACKFLOW PREVENTER	OD	OVERFLOW DRAIN
CO	CLEANOUT	PSI	POUNDS PER SQUARE INCH
CONN	CONNECTION OR CONNECT	PSIG	PSI GAUGE
CONT	CONTINUATION	RPZ	REDUCED PRESSURE ZONE
DCW	DOMESTIC COLD WATER	SH	SHOWER
DEPT	DEPARTMENT	SRD	SECONDARY ROOF DRAIN
DHW	DOMESTIC HOT WATER	STD	STANDARD
DIA	DIAMETER	STR	STRAINER
EWC	ELECTRIC WATER COOLER	TEMP	TEMPERATURE
EXH	EXHAUST	TMV	THERMOSTATIC MIXING VALVE
FD	FLOOR DRAIN	TOP	TOP OF PIPE
FIN	FINISHED	TWS	TEMPERED WATER SUPPLY
FT	FOOT OR FEET	TYP	TYPICAL
G	GAS	UNO	UNLESS NOTED OTHERWISE
GA	GAUGE	UR	URINAL
GAL	GALLONS	V	VENT
GPD	GALLONS PER DAY	VTR	VENT THRU ROOF
GPH	GALLONS PER HOUR	WC	WATER CLOSET

PLUMBING EQUIPMENT SCHEDULE SHELL

TAG	ITEM	MANUFACTURER	MODEL NO.	DESCRIPTION
WH-1	HOSE BIBB	WOODFORD	MODEL 65	PLUMBING CONTRACTOR TO FURNISH AND INSTALL WALL HYDRANT; ANTI-SIPHON, AUTOMATIC DRAINING QUARTER TURN WALL HYDRANT, NON-FREEZE INTEGRAL VACUUM BREAKER, ALL BRONZE INTERIOR PARTS, KEY OPERATED, 3/4" SOLDER INLET.

PLUMBING DRAIN AND CLEANOUT SCHEDULE SHELL

TAG	ITEM	MANUFACTURER	MODEL NO.	DESCRIPTION
DN-1	DOWNSPOUT NOZZLE	WATTS	RD-950	STAINLESS STEEL DOWNSPOUT COVER WITH PERFORATED HINGED STRAINER.
ECO	EXTERIOR CLEANOUT	J.R. SMITH	4100S	CAST IRON BODY ADJUSTABLE CLEANOUT WITH ANCHOR FLANGE, HEAVY DUTY CAST IRON ROUND SCIORATED FRAME AND TOP, AND BOTTOM GASKET CONNECTION OUTLET. PROVIDE A FRAME AND COVER SIMILAR TO NEENAH R-1977 AND SET TOP OF CASTING FLUSH WITH ADJACENT FINISHED PAVEMENT.
OD-1	OVERFLOW DRAIN	WATTS	RD-103-W	PROVIDE SAME AS RD-1. FURNISH WITH 4" HIGH INTERNAL WATER DAM. PIPE SIZE AS INDICATED.
RD-1	ROOF DRAIN	WATTS	RD-103	EPOXY COATED CAST IRON ROOF DRAIN WITH FLASHING CLANP WITH INTERNAL GRAVEL STOP. SELF LOCKING POLYETHYLENE DOME AND NO HUB OUTLET.

STORM DRAINAGE CALCULATIONS

BASED ON 2018 IPC 1106 U.N.O.

PROPERTY INPUTS		RESULTS	
L_1, Roof length [FT]	68	Q, TOTAL RAINFALL [GPM][1]	128.6
W_1, Roof width [FT]	33	VERTICAL DRAIN SIZE (EA.) [IN][2]	3
W_2, Vertical roof width [FT]	203	HORIZONTAL DRAIN SIZE (1/16" SLOPE) [IN][2]	4
L_2, Vertical roof height [FT]	5	HORIZONTAL DRAIN SIZE (1/8" SLOPE) [IN][2]	4
R, Rainfall rate [IN/HR][3]	4.5	HORIZONTAL DRAIN SIZE (1/4" SLOPE) [IN][2]	3
DRAIN QUANTITY	2	HORIZONTAL DRAIN SIZE (1/2" SLOPE) [IN][2]	3

THEREFORE, THE STORM DRAINAGE SYSTEM SHALL BE COMPRISED OF:
(2) PRIMARY DRAINS
(2) SECONDARY DRAINS
3" VERTICAL PIPING DOWN IN WALL, AND
3" HORIZONTAL PIPING SLOPED AT
1/4" SLOPE IN CEILING SPACE FROM EACH SUMP TO EITHER UNDERGROUND STORM CONNECTION OR OVERFLOW DRAIN FIXTURE.

NOTES:
1. Q = R x A x 0.0104; A = L1 x W1 + 0.5(L2 x W2) [EQUATION 11-1, IPC 1106.2.1, 1106.5]
2. DERIVED FROM TABLE 1106.2
3. DERIVED FROM FIGURES 1106.1(1-5)

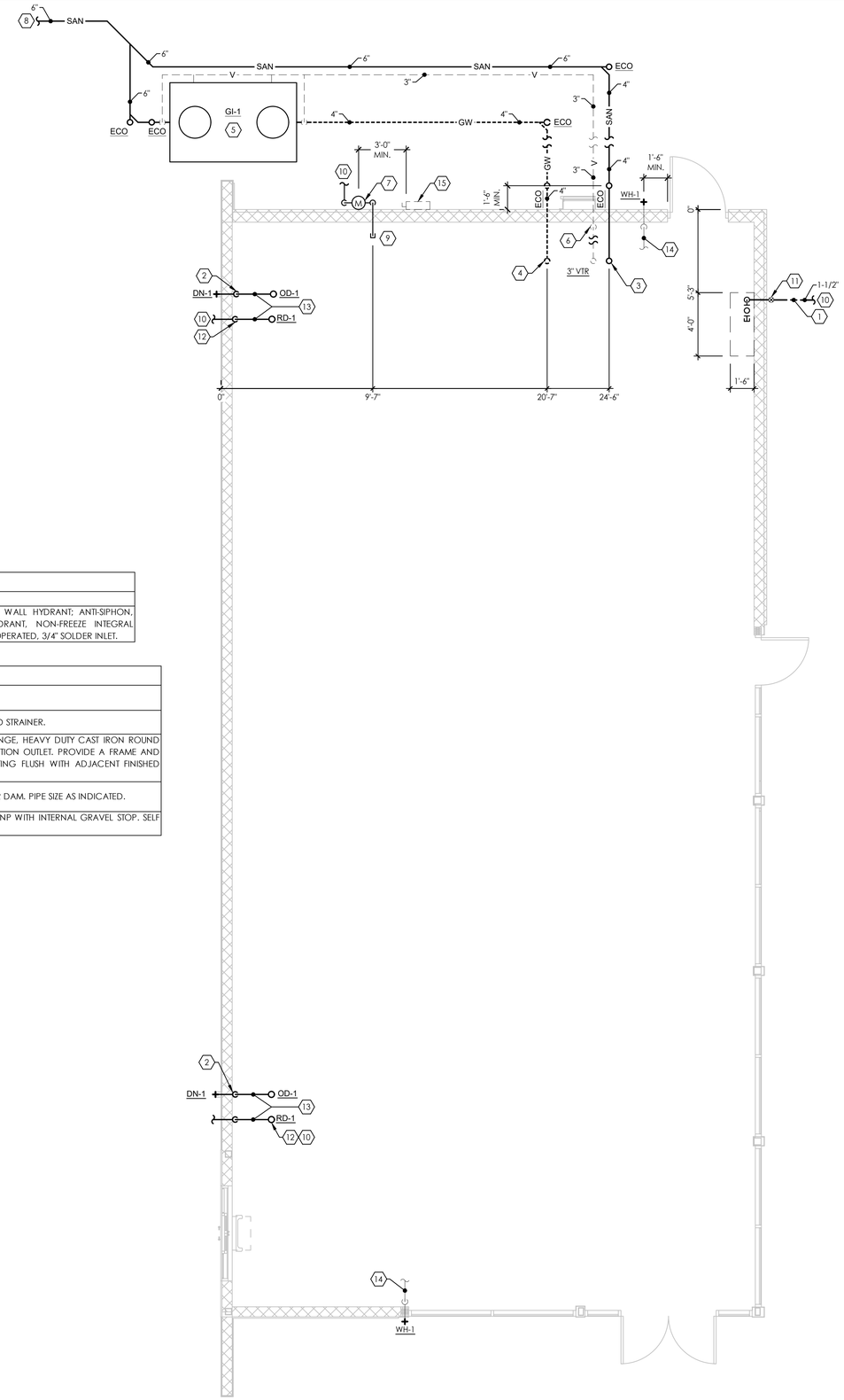

1 FLOOR PLAN - PLUMBING SHELL
1/4" = 1'-0"

GENERAL NOTES:

A. ALL PLUMBING WORK SHALL BE IN STRICT COMPLIANCE WITH STATE, CITY & LOCAL CODE REQUIREMENTS.

B. ALL PLUMBING MUST BE TESTED IN ACCORDANCE WITH THE REQUIREMENTS OF THE LOCAL PLUMBING CODE IN THE PRESENCE OF THE PLUMBING INSPECTOR.

C. THESE DRAWINGS ARE DIAGRAMMATIC AND INDICATE THE GENERAL EXTENT OF THE WORK. PROVIDE PLUMBING SYSTEMS STUBBED INTO TENANT SPACE PER APPLICABLE CODES INCLUDING REQUIRED COMPONENTS, OFFSETS REQUIRED TO AVOID THE STRUCTURE, ETC.

D. CONTRACTOR SHALL COORDINATE THE INSTALLATION OF PLUMBING AND PIPING WITH THE WORK OF ALL OTHER TRADES.

E. PIPING SHALL NOT BE LOCATED OVER ELECTRICAL EQUIPMENT/PANELS. PROVIDE REQUIRED CLEARANCE IN FRONT OF ELECTRICAL EQUIPMENT. PIPING SHALL NOT INTERFERE WITH ELECTRICAL EQUIPMENT CLEARANCE.

F. PIPING SHALL NOT BE INSTALLED IN A LOCATION THAT RESTRICTS THE ACCESS TO MECHANICAL DEVICES REQUIRING ACCESS.

G. CONTRACTOR SHALL PROVIDE SUPPLEMENTARY STEEL AS REQUIRED FOR THE PROPER SUPPORT OF ALL PLUMBING SYSTEMS.

H. PLUMBING VENT PIPING THRU THE ROOF SHALL BE LOCATED 10'-0" FROM ANY FRESH AIR INTAKE LOCATION AND A MINIMUM OF 18" CLEAR FROM THE INSIDE FACE OF PARAPET.

I. MINIMUM UNDERGROUND SANITARY SEWER PIPE SIZE SHALL BE 4". MINIMUM SLOPE OF UNDERGROUND SANITARY WASTE PIPING SHALL BE 1/8" PER FOOT FOR PIPING 3" AND LARGER. MINIMUM SLOPE OF UNDERGROUND GREASE WASTE PIPING AND SANITARY WASTE PIPING 2-1/2" AND SMALLER SHALL BE 1/4" PER FOOT.

J. GENERAL CONTRACTOR SHALL COORDINATE WATER AND GAS METER LOCATIONS AND INSTALLATIONS WITH TENANT REQUIREMENTS, LOCAL AUTHORITIES AND CIVIL DRAWINGS.

K. FUEL GAS PIPING, VENTING SYSTEMS AND EQUIPMENT SHALL BE IN ACCORDANCE WITH THE GOVERNING PROVISIONS OF THE INTERNATIONAL FUEL GAS CODE.

L. ANY PIPE THAT PASSES THROUGH A FOUNDATION WALL SHALL BE PROVIDED WITH A RELIEVING ARCH, OR A PIPE SLEEVE PIPE SHALL BE BUILT INTO THE FOUNDATION WALL. THE SLEEVE SHALL BE TWO PIPE SIZES GREATER THAN THE PIPE PASSING THROUGH THE WALL. CAST IRON PIPE SLEEVE WITH LINK SEAL SHALL BE USED FOR ALL PIPING PASSING THROUGH A FOUNDATION WALL AND SLAB ON GRADE.

M. COORDINATE UNDERGROUND PIPING WITH WALL AND COLUMN FOOTINGS AND GRADE BEAMS.

N. PLUMBING CONTRACTOR TO REMOVE FROM THE SITE ANY SURPLUS EXCAVATION.

O. THE REQUIREMENTS AND LOCATION OF THE WATER METER, THE WATER METER REMOTE READER AND WIRING PROVISIONS SHALL BE DETERMINED BY LOCAL WATER AUTHORITY.

P. SHUT OFF VALVES ARE REQUIRED ON BOTH SIDES OF WATER METERS.

Q. SCOPE AND JET EXISTING SANITARY LINES PRIOR TO CONSTRUCTION AND AFTER COMPLETION. VERIFY ALL TIE-IN POINTS FOR SANITARY PIPING PRIOR TO CONSTRUCTION. IF ANY ISSUES ARISE, CONTACT THE ARCHITECT AND ENGINEER OF RECORD IMMEDIATELY.

R. VERIFY EXACT SIZE AND LOCATION OF EXISTING SANITARY AND SUPPLY MAINS PRIOR TO CONSTRUCTION. IF ANY DISCREPANCY ARISES, CONTACT THE ARCHITECT AND ENGINEER OF RECORD IMMEDIATELY.

S. HOLD ALL ROUGH IN PIPING RISERS 4" ON CENTER OFF INTERIOR FINISHED WALLS UNLESS NOTED OTHERWISE.

CODED NOTES: (#)

1. PROVIDE 1-1/2" UNDERGROUND WATER SERVICE FROM SITE CONTRACTOR PROVIDED WATER LINE 5'-0" OUTSIDE BUILDING WALL. CAPACITY SHALL BE A MINIMUM OF 45 GPM AT 60 PSI. PRESSURE SHALL NOT EXCEED 80 PSI. INSTALL PER MANUFACTURER'S RECOMMENDATIONS AND LOCAL AUTHORITY REQUIREMENTS. COORDINATE EXACT LOCATION IN FIELD PRIOR TO BID. REFER TO WATER ENTRANCE DETAIL ON SHEET P400 FOR FURTHER INFORMATION. REFER TO CIVIL DRAWINGS FOR FURTHER INFORMATION AND COORDINATION.
2. OVERFLOW (SECONDARY) STORM DRAIN DISCHARGE TO DAYLIGHT AT 12" A.F.F. PROVIDE WALL MOUNTED DISCHARGE NOZZLE (DN-1) WITH REMOVABLE STAINLESS STEEL SCREEN.
3. PROVIDE 4" SANITARY WASTE AS INDICATED FOR TENANT CONNECTION. STUB 1'-0" AFF WITH AN INVERT OF AT LEAST 48" BFF.
4. PROVIDE 4" GREASE WASTE AS INDICATED FOR TENANT CONNECTION. STUB 1'-0" AFF WITH AN INVERT OF AT LEAST 48" BFF.
5. PROVIDE CODE COMPLIANT 1,250 GALLON GREASE INTERCEPTOR. INSTALL PER DETAIL ON SHEET P400. REFER TO CIVIL DRAWINGS FOR EXACT LOCATION.
6. PROVIDE 3" VENT FROM GREASE WASTE INLET PIPING AND A 3" VENT FROM GREASE INTERCEPTOR AND RUN INDEPENDENTLY TO 1'-0" AFF INSIDE BUILDING PRIOR TO TYING TOGETHER. RISE 3" COMBINED VENT AND OFFSET AT UNDERSIDE OF ROOF STRUCTURE AND PROVIDE A 3" VTR. REFER TO DETAIL ON SHEET P400. COORDINATE EXACT LOCATION WITH TENANT IMPROVEMENT DRAWINGS PRIOR TO BID. MAINTAIN ALL CODE-REQUIRED CLEARANCES, INCLUDING MINIMUM 10'-0" CLEARANCE FROM ALL OUTSIDE AIR INTAKES.
7. NATURAL GAS SERVICE LINE AND METER PROVIDED BY LOCAL GAS PROVIDER. COORDINATE WITH COMPANY TO LOCATE SERVICE REGULATOR RELIEF VENT IN COMPLIANCE WITH CODE CLEARANCES. METER OUTLET PRESSURE SHALL BE NO LESS THAN 7" W.C. WITH A MINIMUM CAPACITY OF 1600 CFH. SITE CONTRACTOR TO PROVIDE GAS PIPING BELOW GROUND FROM METER TO LOCATION SHOWN.
8. 6" SANITARY WASTE SEWER, 2% SLOPE. REFER TO CIVIL DRAWINGS FOR CONTINUATION.
9. PROVIDE 2-1/2" NATURAL GAS PIPING FROM SITE CONTRACTOR INTO BUILDING AND CAP. STUB IN AT ELEVATION OF 10'-6" AFF. COORDINATE EXACT LOCATION AND ELEVATION WITH ARCHITECTURAL AND TENANT FITOUT DRAWINGS PRIOR TO BID.
10. SEE CIVIL DRAWINGS FOR CONTINUATION.
11. CURB STOP FOR DOMESTIC WATER SERVICE. REFER TO CIVIL DRAWINGS FOR EXACT LOCATION.
12. PROVIDE PRIMARY AND SECONDARY STORM DRAINAGE PIPING FROM RD-1 AND OD-1 DOWN IN WALL. PROVIDE CLEANOUT AT MINIMUM 18" AFF. COORDINATE DEPTH OF INVERT WITH CIVIL DRAWINGS. SIZE AND SLOPE PIPING PER SCHEDULE THIS SHEET.
13. ROUTE DRAIN PIPING AS HIGH TO ROOF DECK AND AS TIGHT TO WALL AS POSSIBLE. COORDINATE EXACT LOCATION AND ROUTING WITH TENANT PRIOR TO BID.
14. PROVIDE INSULATED 1/2" DCW PIPING IN WALL TO KEYED FROST-FREE RECESSED EXTERIOR HOSE BIBB PER SCHEDULE. MOUNT HOSE BIBB 24" A.F.F. STUB COPPER PIPE ABOVE CEILING EXPOSED AND VISIBLE FOR FUTURE CONNECTION BY TENANT. COORDINATE EXACT LOCATION IN FIELD PRIOR TO BID. ENSURE DEVICE FALLS OUTSIDE OF DOOR CLEARANCES WHERE APPLICABLE.
15. ELECTRICAL GEAR SHOWN FOR REFERENCE PURPOSES ONLY. MAINTAIN ALL CODE, AHJ, AND UTILITY PROVIDER REQUIRED CLEARANCES. COORDINATE WITH ELECTRICAL CONTRACTOR PRIOR TO BID.

Consultant:
annex ENGINEERING GROUP
589 w nationwide blvd ste b
columbus, ohio 43215
tel: 614.481.2292
fax: 614.487.8777

BID SET

NOT FOR CONSTRUCTION

COPYRIGHT 2026
ALL DRAWINGS AND SPECIFICATIONS SHALL REMAIN THE PROPERTY OF ANNEX ENGINEERING GROUP AND MAY NOT BE USED, DUPLICATED, OR ALTERED WITHOUT THE WRITTEN CONSENT OF THE ENGINEER.

ECP PARTNERS
ECP PARTNERS, LLC
4362 NORTHLAKE BLVD, SUITE 213
PALM BEACH GARDENS, FL 33410

CMG HIGHLAND CITY SHELL, FL
TBD US 98
LAKELAND, FL 33812

Issue Record:

02.25.2026	PERMIT SET
02.25.2026	BID SET

Revisions:

Drawn: AB
Checked: SS

Project No.
EPL002

Contents:
WASTE, VENT, & SUPPLY PLAN
PLUMBING SHELL

P100

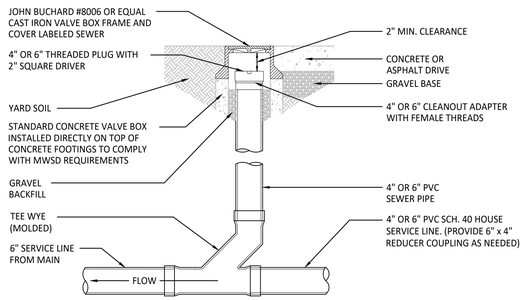

IMPORTANT INSTALLATION NOTE

CLEANOUT DETAIL IS SCHEMATIC IN NATURE. EXTERIOR CLEANOUT TO BE INSTALLED TO COMPLY WITH LOCAL AUTHORITY HAVING JURISDICTION.

7 TYPICAL EXTERIOR CLEANOUT DETAIL
N.T.S.

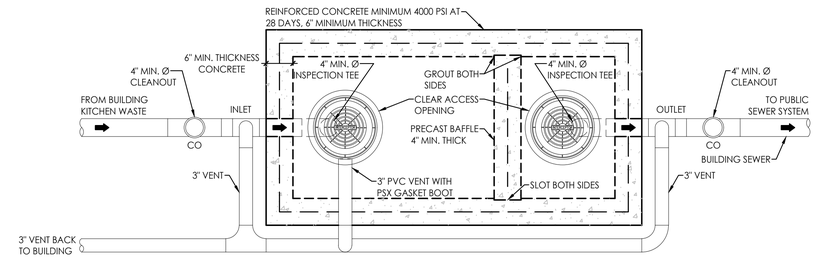

PLAN VIEW

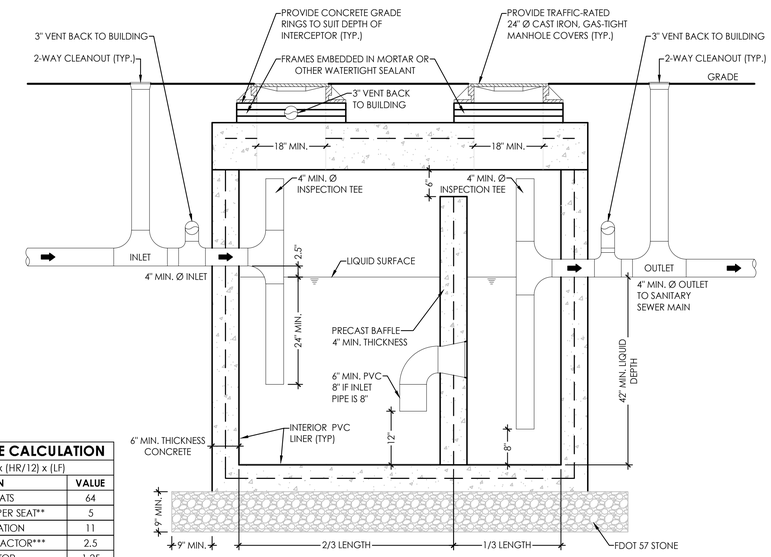

ELEVATION

NOTES:
1. SPECIFIC DESIGN DETAILS MUST IN ALL ASPECTS MEET APPLICABLE FLORIDA PLUMBING AND ADMINISTRATIVE CODE.
2. SIZE GREASE INTERCEPTOR PER OCU MANUAL, SECTION 2310. MINIMUM SIZE 750 GAL; MAXIMUM SIZE 1250 GAL.
3. INTERCEPTORS SHALL BE WATER AND GAS TIGHT.
4. ALL FIXTURES LOCATED IN FOOD AND BEVERAGE PREPARATION AREAS SHALL BE ROUTED THROUGH GREASE INTERCEPTOR. RESTROOM WASTE SHALL NOT BE ROUTED THROUGH INTERCEPTOR.
5. BAFFLE REQUIRED; ALTERNATIVE DESIGNES ARE ACCEPTABLE. DESIGN MUST MEET FLORIDA PLUMBING AND ADMINISTRATIVE CODE.
6. LOADS: H-20 TRUCK WHEELS WITH 30% IMPACT PER AASHTO. TRAFFIC BEARING FRAME AND COVER TO MEET FDOT STANDARDS IF APPLICABLE.

GREASE INTERCEPTOR SIZE CALCULATION

FORMULA*:	(S) x (GS) x (ST) x (HR/12) x (LF)	
FACTOR	DESCRIPTION	VALUE
S	NUMBER OF SEATS	64
GS	GALLONS OF WASTE PER SEAT**	5
HR	HOURS OF OPERATION	11
ST	STORAGE CAPACITY FACTOR***	2.5
LF	LOADING FACTOR	1.25
	MINIMUM SIZE REQUIREMENT [GAL.]:	916.7
	SIZE PROVIDED [GAL.]:	1250

*DERIVED FROM IPC 1003.3.5

**RESTAURANT GS = 5

***MAXIMUM VALUE = 2.5

5 GREASE INTERCEPTOR DETAIL
N.T.S.

INSTALLATION AND MATERIALS TO BE IN ACCORDANCE TO LOCAL WATER AUTHORITY REQUIREMENTS

WATER SERVICE NOTES:

1. WATER SERVICE ENTRANCE MATERIALS, INSTALLATION, AND ALL COMPONENTS (INCLUDING BUT NOT LIMITED TO METERS AND BACKFLOW PREVENTERS) TO BE IN ACCORDANCE WITH THE REQUIREMENTS OF THE LOCAL WATER AUTHORITY, VERIFIED IN ADVANCE OF ANY WORK.
2. ALL REDUCED PRESSURE ZONE PRINCIPLE BACKFLOW PREVENTERS TO BE COMPLETE APPROVED ASSEMBLIES INCLUDING BUT NOT LIMITED TO TEST COCKS AND AIR GAP FITTINGS AT VENT/DRAIN CONNECTION POINT. ASSEMBLIES TO BE AS LISTED IN ASSE 1013, APPROVED BY THE LOCAL BACKFLOW PREVENTION AUTHORITY.
3. PROVIDE FLOOR AND WALL SUPPORT ASSEMBLIES AS REQUIRED TO SECURE AND SUPPORT ITEMS INDICATED AT STRUCTURE.

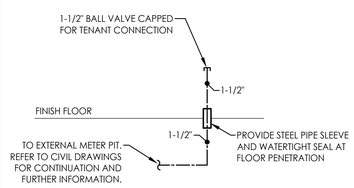

6 WATER ENTRANCE DETAIL
N.T.S.

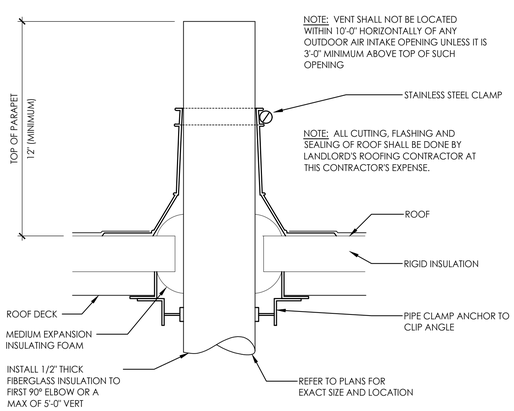

4 VENT THRU ROOF DETAIL
N.T.S.

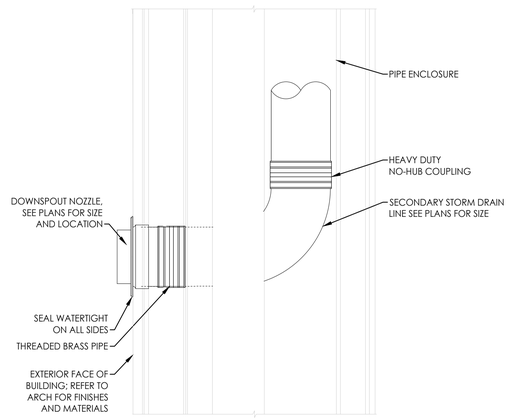

3 DOWNSPOUT DETAIL
N.T.S.

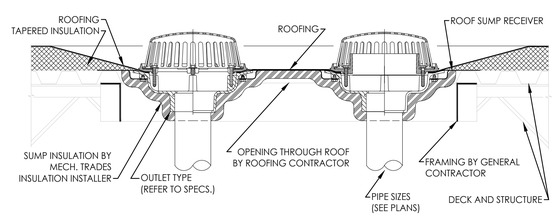

2 PRIMARY & OVERFLOW ROOF DRAIN DETAIL
N.T.S.

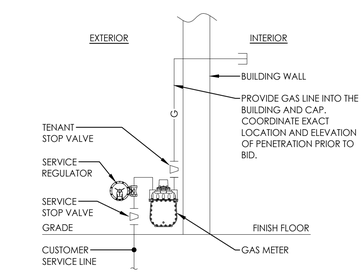

NOTE:
NATURAL GAS SERVICE, VALVES, PRESSURE REGULATOR AND METER PROVIDED BY LOCAL GAS COMPANY. LANDLORD SHALL PAY ALL GAS COMPANY FEES FOR INSTALLATION.

1 GAS SERVICE RISER DETAIL
N.T.S.

Consultant:
annex ENGINEERING GROUP
589 w nationwide blvd ste b
columbus, ohio 43215
tel: 614.481.2292
fax: 614.487.8777

BID SET

NOT FOR CONSTRUCTION

COPYRIGHT 2026
ALL DRAWINGS AND SPECIFICATIONS SHALL REMAIN THE PROPERTY OF ANNEX ENGINEERING GROUP AND MAY NOT BE USED, DUPLICATED, OR ALTERED WITHOUT THE WRITTEN CONSENT OF THE ENGINEER.

ECP PARTNERS
ECP PARTNERS, LLC
4362 NORTHLAKE BLVD, SUITE 213
PALM BEACH GARDENS, FL 33410

CMG HIGHLAND CITY SHELL, FL
TBD US 98
LAKELAND, FL 33812

Issue Record:

02.25.2026	PERMIT SET
02.25.2026	BID SET

Revisions:

Drawn: AB
Checked: SS

Project No.
EPL002

Contents:
DETAILS & SCHEDULES
PLUMBING SHELL

P400

SPECIFICATIONS - DIVISION 22 - PLUMBING

SECTION 220500 - COMMON WORK RESULTS FOR PLUMBING

PART 2 - PRODUCTS

2.1 PERFORMANCE REQUIREMENTS

A. HANGERS AND SUPPORTS FOR PLUMBING PIPING EQUIPMENT:

1. STRUCTURAL PERFORMANCE: HANGERS AND SUPPORTS SHALL WITHSTAND THE EFFECTS OF GRAVITY LOADS AND STRESSES WITHIN LIMITS AND UNDER CONDITIONS INDICATED ACCORDING TO ASCE/SEI 7.

a. DESIGN SUPPORTS FOR MULTIPLE PIPES CAPABLE OF SUPPORTING COMBINED WEIGHT OF SUPPORTED SYSTEMS, AND SYSTEM CONTENTS.

b. DESIGN EQUIPMENT SUPPORTS CAPABLE OF SUPPORTING COMBINED OPERATING WEIGHT OF SUPPORTED EQUIPMENT AND CONNECTED SYSTEMS AND COMPONENTS.

c. DESIGN SEISMIC-RESTRAINT HANGERS AND SUPPORTS FOR PIPING AND EQUIPMENT AND OBTAIN APPROVAL FROM AUTHORITIES HAVING JURISDICTION.

2.2 SLEEVES AND SLEEVE SEALS

A. GALVANIZED-STEEL-PIPE SLEEVES: ASTM A 53/A 53M, TYPE E, GRADE B, SCHEDULE 40, ZINC COATED, WITH PLAIN ENDS.

B. PVC-PIPE SLEEVES: ASTM D 1785, SCHEDULE 40.

C. GALVANIZED-STEEL-SHEET SLEEVES: 0.0239-INCH MINIMUM THICKNESS; ROUND TUBE CLOSED WITH WELDED LONGITUDINAL JOINT.

2.3 GROUT

A. STANDARD: ASTM C 1107/C 1107M, GRADE B, POST-HARDENING AND VOLUME-ADJUSTING, DRY, HYDRAULIC-CEMENT GROUT.

1. CHARACTERISTICS: NONSHRINK; RECOMMENDED FOR INTERIOR AND EXTERIOR APPLICATIONS.

2. DESIGN MIX: 5000-PSI, 28-DAY COMPRESSIVE STRENGTH.

3. PACKAGING: PREMIXED AND FACTORY PACKAGED.

2.4 ESCUTCHEONS AND FLOOR PLATES

A. ONE-PIECE, DEEP-PATTERN TYPE: DEEP-DRAWN, BOX-SHAPED BRASS WITH CHROME-PLATED FINISH AND SPRING-CLIP FASTENERS.

B. ONE-PIECE, STAMPED-STEEL TYPE: WITH CHROME-PLATED FINISH AND SPRING-CLIP FASTENERS.

C. ONE-PIECE FLOOR PLATES: CAST-IRON FLANGE WITH HOLES FOR FASTENERS.

2.6 HANGERS AND SUPPORTS FOR PLUMBING PIPING EQUIPMENT

A. CARBON-STEEL PIPE HANGERS AND SUPPORTS:

1. DESCRIPTION: MSS SP-58, TYPES 1 THROUGH 58, FACTORY-FABRICATED COMPONENTS.

2. GALVANIZED METALLIC COATINGS: PREGALVANIZED OR HOT DIPPED.

3. NONMETALLIC COATINGS: PLASTIC COATING, JACKET, OR LINER.

4. PADDED HANGERS: HANGER WITH FIBERGLASS OR OTHER PIPE INSULATION PAD OR CUSHION TO SUPPORT BEARING SURFACE OF PIPING.

5. HANGER RODS: CONTINUOUS-THREAD ROD, NUTS, AND WASHER MADE OF CARBON STEEL.

B. COPPER PIPE HANGERS:

1. DESCRIPTION: MSS SP-58, TYPES 1 THROUGH 58, COPPER-COATED-STEEL, FACTORY-FABRICATED COMPONENTS.

2. HANGER RODS: CONTINUOUS-THREAD ROD, NUTS, AND WASHER MADE OF COPPER-COATED STEEL.

C. FASTENER SYSTEMS:

1. MECHANICAL-EXPANSION ANCHORS: INSERT-WEDGE-TYPE, ZINC-COATED STEEL ANCHORS, FOR USE IN HARDENED PORTLAND CEMENT CONCRETE; WITH PULL-OUT, TENSION, AND SHEAR CAPACITIES APPROPRIATE FOR SUPPORTED LOADS AND BUILDING MATERIALS WHERE USED.

D. MISCELLANEOUS MATERIALS:

1. STRUCTURAL STEEL: ASTM A 36/A 36M, CARBON-STEEL PLATES, SHAPES, AND BARS; BLACK AND GALVANIZED.

2. GROUT: ASTM C 1107, FACTORY-MIXED AND -PACKAGED, DRY, HYDRAULIC-CEMENT, NONSHRINK AND NONMETALLIC GROUT; SUITABLE FOR INTERIOR AND EXTERIOR APPLICATIONS.

a. PROPERTIES: NONSTAINING, NONCORROSIVE, AND NONGASEOUS.

b. DESIGN MIX: 5000-PSI, 28-DAY COMPRESSIVE STRENGTH.

PART 3 - EXECUTION

3.1 GENERAL PIPING INSTALLATIONS

A. INSTALL PIPING FREE OF SAGS AND BENDS.

B. INSTALL FITTINGS FOR CHANGES IN DIRECTION AND BRANCH CONNECTIONS.

C. SLEEVES:

1. INSTALL SLEEVES FOR PIPING PASSING THROUGH PENETRATIONS IN FLOORS, PARTITIONS, ROOFS, AND WALLS.

2. INSTALL SLEEVES IN CONCRETE FLOORS, CONCRETE ROOF SLABS, AND CONCRETE WALLS AS NEW SLABS AND WALLS ARE CONSTRUCTED.

a. USE GROUT AND SEAL THE SPACE OUTSIDE OF SLEEVES IN SLABS AND WALLS WITHOUT SLEEVE-SEAL SYSTEM.

3. INSTALL SLEEVES FOR PIPES PASSING THROUGH INTERIOR PARTITIONS.

4. FIRE-BARRIER PENETRATIONS: MAINTAIN INDICATED FIRE RATING OF WALLS, PARTITIONS, CEILINGS, AND FLOORS AT PIPE PENETRATIONS. SEAL PIPE PENETRATIONS WITH FIRESTOP MATERIALS. COMPLY WITH REQUIREMENTS FOR FIRESTOPPING SPECIFIED IN SECTION 078446 "PENETRATION FIRESTOPPING."

D. ESCUTCHEONS AND FLOOR PLATES:

4. INSTALL ESCUTCHEONS FOR PIPING PENETRATIONS OF WALLS, CEILINGS, AND FINISHED FLOORS.

5. INSTALL ESCUTCHEONS WITH ID TO CLOSELY FIT AROUND PIPE, TUBE, AND INSULATION OF PIPING AND WITH OD THAT COMPLETELY COVERS OPENING.

6. INSTALL FLOOR PLATES FOR PIPING PENETRATIONS OF EQUIPMENT-ROOM FLOORS.

7. INSTALL FLOOR PLATES WITH ID TO CLOSELY FIT AROUND PIPE, TUBE, AND INSULATION OF PIPING AND WITH OD THAT COMPLETELY COVERS OPENING.

G. INSTALL UNIONS AT FINAL CONNECTION TO EACH PIECE OF EQUIPMENT.

H. INSTALL DIELECTRIC UNIONS AND FLANGES TO CONNECT PIPING MATERIALS OF DISSIMILAR METALS IN GAS PIPING.

I. INSTALL DIELECTRIC COUPLING AND NIPPLE FITTINGS TO CONNECT PIPING MATERIALS OF DISSIMILAR METALS IN WATER PIPING.

3.2 HANGERS AND SUPPORTS

A. COMPLY WITH MSS SP-69 AND MSS SP-89. INSTALL BUILDING ATTACHMENTS WITHIN CONCRETE OR TO STRUCTURAL STEEL.

B. INSTALL HANGERS AND SUPPORTS TO ALLOW CONTROLLED THERMAL AND SEISMIC MOVEMENT OF PIPING SYSTEMS.

C. INSTALL POWDER-ACTUATED FASTENERS AND MECHANICAL-EXPANSION ANCHORS IN CONCRETE AFTER CONCRETE IS CURED. DO NOT USE IN LIGHTWEIGHT CONCRETE OR IN SLABS LESS THAN 4 INCHES THICK.

D. LOAD DISTRIBUTION: INSTALL HANGERS AND SUPPORTS SO PIPING LIVE AND DEAD LOADING AND STRESSES FROM MOVEMENT WILL NOT BE TRANSMITTED TO CONNECTED EQUIPMENT.

E. HORIZONTAL-PIPING HANGERS AND SUPPORTS: UNLESS OTHERWISE INDICATED AND EXCEPT AS SPECIFIED IN PIPING SYSTEM SPECIFICATION SECTIONS, INSTALL THE FOLLOWING TYPES:

8. ADJUSTABLE STEEL CLEVIS HANGERS (MSS TYPE 1): FOR SUSPENSION OF NONINSULATED OR INSULATED STATIONARY PIPES, NPS 1/2 TO NPS 30.

9. PIPE HANGERS (MSS TYPE 5): FOR SUSPENSION OF PIPES, NPS 1/2 TO NPS 4, TO ALLOW OFF-CENTER CLOSURE FOR HANGER INSTALLATION BEFORE PIPE ERECTION.

10. ADJUSTABLE STEEL BAND HANGERS (MSS TYPE 7): FOR SUSPENSION OF NONINSULATED STATIONARY PIPES, NPS 1/2 TO NPS 8.

11. ADJUSTABLE BAND HANGERS (MSS TYPE 9): FOR SUSPENSION OF NONINSULATED STATIONARY PIPES, NPS 1/2 TO NPS 8.

12. ADJUSTABLE SWIVEL-RING BAND HANGERS (MSS TYPE 10): FOR SUSPENSION OF NONINSULATED STATIONARY PIPES, NPS 1/2 TO NPS 2.

F. VERTICAL-PIPING CLAMPS: UNLESS OTHERWISE INDICATED AND EXCEPT AS SPECIFIED IN PIPING SYSTEM SPECIFICATION SECTIONS, INSTALL THE FOLLOWING TYPES:

1. EXTENSION PIPE OR RISER CLAMPS (MSS TYPE 8): FOR SUPPORT OF PIPE RISERS, NPS 3/4 TO NPS 20.

2. CARBON- OR ALLOY-STEEL RISER CLAMPS (MSS TYPE 42): FOR SUPPORT OF PIPE RISERS, NPS 3/4 TO NPS 20, IF LONGER ENDS ARE REQUIRED FOR RISER CLAMPS.

3.3 GENERAL EQUIPMENT INSTALLATIONS

A. INSTALL EQUIPMENT TO ALLOW MAXIMUM POSSIBLE HEADROOM UNLESS SPECIFIC MOUNTING HEIGHTS ARE NOT INDICATED.

B. INSTALL EQUIPMENT LEVEL AND PLUMB, PARALLEL AND PERPENDICULAR TO OTHER BUILDING SYSTEMS AND COMPONENTS, UNLESS OTHERWISE INDICATED.

C. INSTALL MECHANICAL EQUIPMENT TO FACILITATE SERVICE, MAINTENANCE, AND REPAIR OR REPLACEMENT OF COMPONENTS. CONNECT EQUIPMENT FOR EASE OF DISCONNECTING, WITH MINIMUM INTERFERENCE TO OTHER INSTALLATIONS. EXTEND GREASE FITTINGS TO ACCESSIBLE LOCATIONS.

D. INSTALL EQUIPMENT TO ALLOW RIGHT OF WAY FOR PIPING INSTALLED AT REQUIRED SLOPE.

END OF SECTION

SECTION 220523 - GENERAL-DUTY VALVES FOR PLUMBING PIPING

PART 1 - GENERAL

1.1 SECTION REQUIREMENTS

A. SUBMITTALS:

1. PRODUCT DATA: FOR EACH TYPE OF PRODUCT INDICATED.

PART 2 - PRODUCTS

2.1 SYSTEM DESCRIPTION

A. ASME COMPLIANCE: ASME B16.10 AND ASME B16.34 FOR FERROUS VALVE DIMENSIONS AND DESIGN CRITERIA.

B. NSF COMPLIANCE: NSF 61 FOR VALVE MATERIALS FOR POTABLE-WATER SERVICE.

2.2 GENERAL-DUTY VALVES

A. VALVE SIZES: SAME AS UPSTREAM PIPING UNLESS OTHERWISE INDICATED.

B. VALVES IN INSULATED PIPING: WITH 2-INCH STEM EXTENSIONS.

C. END CONNECTIONS: THREADS SHALL COMPLY WITH ANSI B1.20.1. FLANGES SHALL COMPLY WITH ANSI B16.24 FOR BRONZE VALVES. SOLDER-JOINT CONNECTIONS SHALL COMPLY WITH ANSI B16.18.

D. ONE-PIECE, COPPER-ALLOY BALL VALVES: LEAD FREE BRONZE BODY WITH CHROME-PLATED BRASS BALL, MTFE SEATS, AND 600-PSIG MINIMUM CWP RATING.

E. TWO-PIECE, COPPER-ALLOY BALL VALVES: LEAD FREE BRONZE BODY WITH FULL-PORT, CHROME-PLATED BRASS BALL; RPTFE SEATS; AND 600-PSIG MINIMUM CWP RATING AND BLOWOUT-PROOF STEM.

F. LEAD FREE BRONZE, SWING CHECK VALVES: CLASS 125, BRONZE BODY WITH BRONZE DISC AND SEAT.

PART 3 - EXECUTION

3.1 INSTALLATION

A. USE BALL VALVES FOR SHUTOFF DUTY AND FOR THROTTLING DUTY.

B. LOCATE VALVES FOR EASY ACCESS AND PROVIDE SEPARATE SUPPORT WHERE NECESSARY.

C. INSTALL VALVES FOR EACH FIXTURE AND ITEM OF EQUIPMENT.

D. INSTALL VALVES IN HORIZONTAL PIPING WITH STEM AT OR ABOVE CENTER OF PIPE.

E. INSTALL VALVES IN A POSITION TO ALLOW FULL STEM MOVEMENT.

F. INSTALL CHECK VALVES FOR PROPER DIRECTION OF FLOW IN HORIZONTAL POSITION WITH HINGE PIN LEVEL.

END OF SECTION 220523

SECTION 220700 - PLUMBING INSULATION

PART 2 - PRODUCTS

2.1 PERFORMANCE REQUIREMENTS

A. INSULATION INSTALLED INDOORS: FLAME-SPREAD INDEX OF 25 OR LESS, AND SMOKE-DEVELOPED INDEX OF 50 OR LESS ACCORDING TO ASTM E 84.

2.2 INSULATION MATERIALS

A. MINERAL-FIBER, PREFORMED PIPE INSULATION: COMPLY WITH ASTM C 547, TYPE I, GRADE A, WITH FACTORY-APPLIED ASJ.

1. PRODUCTS: SUBJECT TO COMPLIANCE WITH REQUIREMENTS, PROVIDE ONE OF THE FOLLOWING:

a. JOHNS MANVILLE; MICRO-LOK.

b. KNAUF INSULATION; 1000-DEGREE PIPE INSULATION.

c. OWENS CORNING; FIBERGLAS PIPE INSULATION.

2. TYPE I, 850 DEG F MATERIALS: MINERAL OR GLASS FIBERS BONDED WITH A THERMOSETTING RESIN. COMPLY WITH ASTM C 547, TYPE I, GRADE A, WITH FACTORY-APPLIED ASJ. FACTORY-APPLIED JACKET REQUIREMENTS ARE SPECIFIED IN "FACTORY-APPLIED JACKETS" ARTICLE.

B. PROTECTIVE SHIELDING PIPE COVERS:

1. MANUFACTURERS: SUBJECT TO COMPLIANCE WITH REQUIREMENTS, PROVIDE PRODUCTS BY ONE OF THE FOLLOWING:

a. MCGUIRE MANUFACTURING.

b. PLUMBEREX.

c. TRUEBRO; A BRAND OF IPS CORPORATION.

d. ZURN INDUSTRIES, LLC; TUBULAR BRASS PLUMBING PRODUCTS OPERATION.

2. DESCRIPTION: MANUFACTURED PLASTIC WRAPS FOR COVERING PLUMBING FIXTURE HOT- AND COLD-WATER SUPPLIES AND TRAP AND DRAIN PIPING. COMPLY WITH AMERICANS WITH DISABILITIES ACT (ADA) REQUIREMENTS.

2.3 ADHESIVES

A. MINERAL-FIBER ADHESIVE: COMPLY WITH MIL-A-3316C, CLASS 2, GRADE A.

1. FOR INDOOR APPLICATIONS, ADHESIVE SHALL HAVE A VOC CONTENT OF 80 G/L OR LESS WHEN CALCULATED ACCORDING TO 40 CFR 59, SUBPART D (EPA METHOD 24).

2. ADHESIVE SHALL COMPLY WITH THE TESTING AND PRODUCT REQUIREMENTS OF THE CALIFORNIA DEPARTMENT OF HEALTH SERVICES' "STANDARD PRACTICE FOR THE TESTING OF VOLATILE ORGANIC EMISSIONS FROM VARIOUS SOURCES USING SMALL-SCALE ENVIRONMENTAL CHAMBERS."

2.4 MASTICS

A. VAPOR-BARRIER MASTIC: WATER BASED; SUITABLE FOR INDOOR USE ON BELOW AMBIENT SERVICES.

1. FOR INDOOR APPLICATIONS, USE MASTICS THAT HAVE A VOC CONTENT OF 50 G/L OR LESS.

2. WATER-VAPOR PERMEANCE: ASTM E 96/E 96M, PROCEDURE B, 0.013 PERM AT 43-MIL DRY FILM THICKNESS.

3. SERVICE TEMPERATURE RANGE: MINUS 20 TO PLUS 180 DEG F.

4. SOLIDS CONTENT: ASTM D 1644, 58 PERCENT BY VOLUME AND 70 PERCENT BY WEIGHT.

5. COLOR: WHITE.

B. BREATHER MASTIC: WATER BASED; SUITABLE FOR INDOOR AND OUTDOOR USE ON ABOVE AMBIENT SERVICES.

1. WATER-VAPOR PERMEANCE: ASTM F 1249, 1.8 PERMS AT 0.0625-INCH DRY FILM THICKNESS.

2. SERVICE TEMPERATURE RANGE: MINUS 20 TO PLUS 180 DEG F.

3. SOLIDS CONTENT: 60 PERCENT BY VOLUME AND 66 PERCENT BY WEIGHT.

4. COLOR: WHITE.

2.5 SEALANTS

A. JOINT SEALANTS:

1. MATERIALS SHALL BE COMPATIBLE WITH INSULATION MATERIALS, JACKETS, AND SUBSTRATES.

2. PERMANENTLY FLEXIBLE, ELASTOMERIC SEALANT.

3. SERVICE TEMPERATURE RANGE: MINUS 100 TO PLUS 300 DEG F.

4. COLOR: WHITE OR GRAY.

5. FOR INDOOR APPLICATIONS, SEALANTS SHALL HAVE A VOC CONTENT OF 420 G/L OR LESS.

B. ASJ FLASHING SEALANTS:

1. MATERIALS SHALL BE COMPATIBLE WITH INSULATION MATERIALS, JACKETS, AND SUBSTRATES.

2. FIRE- AND WATER-RESISTANT, FLEXIBLE, ELASTOMERIC SEALANT.

3. SERVICE TEMPERATURE RANGE: MINUS 40 TO PLUS 250 DEG F.

4. COLOR: WHITE.

5. FOR INDOOR APPLICATIONS, SEALANTS SHALL HAVE A VOC CONTENT OF 420 G/L OR LESS.

2.6 FACTORY-APPLIED JACKETS

A. INSULATION SYSTEM SCHEDULES INDICATE FACTORY-APPLIED JACKETS ON VARIOUS APPLICATIONS. WHEN FACTORY-APPLIED JACKETS ARE INDICATED, COMPLY WITH THE FOLLOWING:

1. ASJ: WHITE, KRAFT-PAPER, FIBERGLASS-REINFORCED SCRIM WITH ALUMINUM-FOIL BACKING; COMPLYING WITH ASTM C 1136, TYPE I.

2.7 TAPES

A. ASJ TAPE: WHITE VAPOR-RETARDER TAPE MATCHING FACTORY-APPLIED JACKET WITH ACRYLIC ADHESIVE, COMPLYING WITH ASTM C 1136.

1. WIDTH: 3 INCHES.

2. THICKNESS: 11.5 MILS.

3. ADHESION: 90 OUNCES FORCE/INCH IN WIDTH.

4. ELONGATION: 2 PERCENT.

5. TENSILE STRENGTH: 40 LBF/INCH IN WIDTH.

6. ASJ TAPE DISKS AND SQUARES: PRECUT DISKS OR SQUARES OF ASJ TAPE.

PART 3 - EXECUTION

3.1 PIPE INSULATION INSTALLATION

A. COMPLY WITH REQUIREMENTS OF THE MIDWEST INSULATION CONTRACTORS ASSOCIATION'S "NATIONAL COMMERCIAL & INDUSTRIAL INSULATION STANDARDS" FOR INSULATION INSTALLATION ON PIPES AND EQUIPMENT.

B. INSULATION INSTALLATION AT INTERIOR WALL AND PARTITION PENETRATIONS (THAT ARE NOT FIRE RATED): INSTALL INSULATION CONTINUOUSLY THROUGH WALLS AND PARTITIONS.

C. INSULATION INSTALLATION AT FIRE-RATED WALL, PARTITION, AND FLOOR PENETRATIONS: INSTALL INSULATION CONTINUOUSLY THROUGH PENETRATIONS. SEAL PENETRATIONS. COMPLY WITH REQUIREMENTS IN SECTION 078400.

D. MINERAL-FIBER INSULATION INSTALLATION:

1. INSULATION INSTALLATION ON STRAIGHT PIPES AND TUBES: WHERE VAPOR BARRIERS ARE INDICATED, SEAL LONGITUDINAL SEAMS, END JOINTS, AND PROTRUSIONS WITH VAPOR-BARRIER MASTIC AND JOINT SEALANT.

2. FOR INSULATION WITH FACTORY-APPLIED JACKETS ON ABOVE AMBIENT SURFACES, SECURE LAPS WITH OUTWARD CLINCHED STAPLES AT 6 INCHES O.C.

3. FOR INSULATION WITH FACTORY-APPLIED JACKETS ON BELOW AMBIENT SURFACES, DO NOT STAPLE LONGITUDINAL TABS BUT SECURE TABS WITH ADDITIONAL ADHESIVE AS RECOMMENDED BY INSULATION MATERIAL MANUFACTURER AND SEAL WITH VAPOR-BARRIER MASTIC AND FLASHING SEALANT.

E. INTERIOR PIPING SYSTEM APPLICATIONS; INSULATE THE FOLLOWING PIPING SYSTEMS:

1. DOMESTIC HOT WATER.

2. RECIRCULATED DOMESTIC HOT WATER.

3. EXPOSED WATER SUPPLIES AND SANITARY DRAINS OF FIXTURES FOR PEOPLE WITH DISABILITIES.

F. DO NOT APPLY INSULATION TO THE FOLLOWING SYSTEMS, MATERIALS, AND EQUIPMENT:

1. FLEXIBLE CONNECTORS.

2. SANITARY DRAINAGE AND VENT PIPING.

3. DRAINAGE PIPING LOCATED IN CRAWLSPACES UNLESS OTHERWISE INDICATED.

4. CHROME-PLATED PIPES AND FITTINGS, EXCEPT FOR PLUMBING FIXTURES FOR PEOPLE WITH DISABILITIES.

5. PIPING SPECIALTIES, INCLUDING AIR CHAMBERS, UNIONS, STRAINERS, CHECK VALVES, PLUG VALVES, AND FLOW REGULATORS.

3.2 INDOOR PIPING INSULATION SCHEDULE

A. DOMESTIC COLD WATER:

1. NPS 1 AND SMALLER: INSULATION SHALL BE THE FOLLOWING:

a. MINERAL-FIBER, PREFORMED PIPE INSULATION, TYPE I: 1/2 INCH THICK.

2. NPS 1-1/4 AND LARGER: INSULATION SHALL BE THE FOLLOWING:

a. MINERAL-FIBER, PREFORMED PIPE INSULATION, TYPE I: 1 INCH THICK.

B. DOMESTIC HOT AND RECIRCULATED HOT WATER:

1. NPS 2 AND SMALLER: INSULATION SHALL BE THE FOLLOWING:

a. MINERAL-FIBER, PREFORMED PIPE INSULATION, TYPE I: 1 INCH THICK.

C. EXPOSED SANITARY DRAINS, DOMESTIC WATER, DOMESTIC HOT WATER, AND STOPS FOR PLUMBING FIXTURES FOR PEOPLE WITH DISABILITIES:

1. ALL PIPE SIZES: INSULATION SHALL BE THE FOLLOWING:

a. PROTECTIVE SHIELDING PIPING COVERS.

b. MANUFACTURED PLASTIC WRAPS FOR COVERING PLUMBING FIXTURE HOT- AND COLD-WATER SUPPLIES AND TRAP AND DRAIN PIPING. COMPLY WITH AMERICANS WITH DISABILITIES ACT (ADA) REQUIREMENTS.

END OF SECTION

SECTION 221116 - DOMESTIC WATER PIPING

PART 2 - PRODUCTS

2.1 PERFORMANCE REQUIREMENTS

A. POTABLE-WATER PIPING AND COMPONENTS SHALL COMPLY WITH NSF 14 AND NSF 61.

2.2 PIPE AND FITTINGS

A. HARD COPPER TUBING: ASTM B 88, TYPE L, WATER TUBE, DRAWN TEMPER WITH WROUGHT-COPPER, SOLDER-JOINT FITTINGS. FURNISH WROUGHT-COPPER FITTINGS IF INDICATED.

1. COPPER UNIONS: CAST-COPPER-ALLOY, HEXAGONAL-STOCK BODY, WITH BALL-AND-SOCKET, METAL-TO-METAL SEATING SURFACES AND SOLDER-JOINT OR THREADED ENDS.

2. JOINING MATERIALS: USE ASTM B 813, WATER-FLUSHABLE, LEAD-FREE FLUX; ASTM B 32, LEAD-FREE-ALLOY SOLDER.

B. SOFT COPPER TUBING: ASTM B 88, TYPES K, WATER TUBE, ANNEALED TEMPER WITH COPPER PRESSURE FITTINGS, CAST-COPPER-ALLOY OR WROUGHT-COPPER, SOLDER-JOINT FITTINGS. FURNISH WROUGHT-COPPER FITTINGS IF INDICATED.

1. JOINING MATERIALS: USE ASTM B 813, WATER-FLUSHABLE, LEAD-FREE FLUX; ASTM B 32, LEAD-FREE-ALLOY SOLDER.

C. CPVC PIPING: ASTM F 441/F 441M, SCHEDULE 40 PIPE WITH ASTM F 438, CPVC SCHEDULE 40 SOCKET-TYPE FITTINGS.

D. UPONOR PEX TUBE AND FITTINGS: ASTM F 877, SDR 9 PEX TUBING AND ASTM F 1807, METAL INSERT-TYPE FITTINGS WITH COPPER OR STAINLESS-STEEL CRIMP RINGS.

1. MANIFOLD: ASTM F 877 PLASTIC OR CORROSION-RESISTANT-METAL ASSEMBLY, WITH A PLASTIC OR CORROSION-RESISTANT-METAL VALVE FOR EACH OUTLET.

E. SPECIAL-DUTY VALVES:

1. COMPLY WITH REQUIREMENTS IN SECTION 220523 "GENERAL-DUTY VALVES FOR PLUMBING PIPING" FOR GENERAL-DUTY METAL VALVES.

2. COMPLY WITH REQUIREMENTS IN SECTION 221119 "DOMESTIC WATER PIPING SPECIALTIES" FOR BALANCING VALVES, DRAIN VALVES, BACKFLOW PREVENTERS, AND VACUUM BREAKERS.

F. TRANSITION FITTINGS: MANUFACTURED PIPING COUPLING OR SPECIFIED PIPING SYSTEM FITTING. SAME SIZE AS PIPES TO BE JOINED AND PRESSURE RATING AT LEAST EQUAL TO PIPES TO BE JOINED.

G. FLEXIBLE CONNECTORS: STAINLESS-STEEL, CORRUGATED-METAL TUBING WITH WIRE-BRAID COVERING. WORKING-PRESSURE RATING A MINIMUM OF 200 PSIG.

PART 3 - EXECUTION

3.1 INSTALLATION

A. COMPLY WITH REQUIREMENTS IN SECTION 220500 "COMMON WORK RESULTS FOR PLUMBING" FOR BASIC PIPING INSTALLATION REQUIREMENTS.

B. INSTALL WALL PENETRATION SYSTEM AT EACH SERVICE PIPE PENETRATION THROUGH FOUNDATION WALL. MAKE INSTALLATION WATERTIGHT. COMPLY WITH REQUIREMENTS IN SECTION 220500 "COMMON WORK RESULTS FOR PLUMBING" FOR WALL PENETRATION SYSTEMS.

C. INSTALL SHUTOFF VALVE, HOSE-END DRAIN VALVE, STRAINER, PRESSURE GAGE, AND TEST TEE WITH VALVE, INSIDE THE BUILDING AT EACH DOMESTIC WATER SERVICE ENTRANCE. COMPLY WITH REQUIREMENTS IN SECTION 220500 "COMMON WORK RESULTS FOR PLUMBING" FOR PRESSURE GAGES AND SECTION 221119 "DOMESTIC WATER PIPING SPECIALTIES" FOR DRAIN VALVES AND STRAINERS.

D. INSTALL DOMESTIC WATER PIPING WITHOUT PITCH FOR HORIZONTAL PIPING AND PLUMB FOR VERTICAL PIPING.

E. COMPLY WITH REQUIREMENTS IN SECTION 220500 "COMMON WORK RESULTS FOR PLUMBING" FOR BASIC PIPING JOINT CONSTRUCTION.

1. SOLDERED JOINTS: COMPLY WITH PROCEDURES IN ASTM B 828 UNLESS OTHERWISE INDICATED.

F. COMPLY WITH REQUIREMENTS IN SECTION 220500 "COMMON WORK RESULTS FOR PLUMBING" FOR PIPE HANGER AND SUPPORT DEVICES.

1. INSTALL HANGERS FOR STEEL PIPING WITH THE FOLLOWING MAXIMUM HORIZONTAL SPACING AND MINIMUM ROD DIAMETERS:

a. NPS 1-1/4 AND SMALLER: 84 INCHES WITH 3/8-INCH ROD.

b. NPS 1-1/2: 108 INCHES WITH 3/8-INCH ROD.

c. NPS 2: 10 FEET WITH 3/8-INCH ROD.

d. NPS 2-1/2: 11 FEET WITH 1/2-INCH ROD.

e. SUPPORT VERTICAL PIPING AT EACH FLOOR.

2. INSTALL VINYL-COATED HANGERS FOR CPVC PIPING WITH THE FOLLOWING MAXIMUM HORIZONTAL SPACING AND MINIMUM ROD DIAMETERS:

a. NPS 1 AND SMALLER: 36 INCHES WITH 3/8-INCH ROD.

b. NPS 1-1/4 TO NPS 2: 48 INCHES WITH 3/8-INCH ROD.

c. NPS 2-1/2 TO NPS 3-1/2: 48 INCHES WITH 1/2-INCH ROD.

d. INSTALL SUPPORTS FOR VERTICAL CPVC PIPING EVERY 60 INCHES FOR NPS 1 AND SMALLER, AND EVERY 72 INCHES FOR NPS 1-1/4 AND LARGER.

3. INSTALL VINYL-COATED HANGERS FOR PEX PIPING WITH THE FOLLOWING MAXIMUM HORIZONTAL SPACING AND MINIMUM ROD DIAMETERS:

a. NPS 1 AND SMALLER: 32 INCHES WITH 3/8-INCH ROD.

b. INSTALL HANGERS FOR VERTICAL PEX PIPING EVERY 48 INCHES.

3.2 INSPECTING AND CLEANING

A. INSPECT AND TEST PIPING SYSTEMS AS FOLLOWS:

1. FILL DOMESTIC WATER PIPING. CHECK COMPONENTS TO DETERMINE THAT THEY ARE NOT AIR BOUND AND THAT PIPING IS FULL OF WATER.

2. TEST FOR LEAKS AND DEFECTS IN NEW PIPING AND PARTS OF EXISTING PIPING THAT HAVE BEEN ALTERED, EXTENDED, OR REPAIRED.

B. CLEAN AND DISINFECT POTABLE DOMESTIC WATER PIPING BY FILLING SYSTEM WITH WATER/CHLORINE SOLUTION WITH AT LEAST 50 PPM OF CHLORINE. ISOLATE WITH VALVES AND ALLOW TO STAND FOR 24 HOURS. FLUSH SYSTEM WITH CLEAN, POTABLE WATER UNTIL NO CHLORINE IS IN WATER COMING FROM SYSTEM AFTER THE STANDING TIME.

Consultant:
annex ENGINEERING GROUP
589 w nationwide blvd ste b
columbus, ohio 43215
tel: 614.481.2292
fax: 614.487.8777

BID SET

NOT FOR CONSTRUCTION

COPYRIGHT 2026
ALL DRAWINGS AND SPECIFICATIONS SHALL REMAIN THE PROPERTY OF ANNEX ENGINEERING GROUP AND MAY NOT BE USED, DUPLICATED, OR ALTERED WITHOUT THE WRITTEN CONSENT OF THE ENGINEER.

ECP PARTNERS
ECP PARTNERS, LLC
4362 NORTHLAKE BLVD, SUITE 213
PALM BEACH GARDENS, FL 33410

CMG HIGHLAND CITY SHELL, FL
TBD US 98
LAKELAND, FL 33812

Issue Record:

02.25.2026	PERMIT SET
02.25.2026	BID SET

Revisions:

Drawn: AB
Checked: SS

Project No.
EPL002

Contents:
SPECIFICATIONS
PLUMBING SHELL

P710

SPECIFICATIONS - DIVISION 22 - PLUMBING

3.3 PIPING SCHEDULE

A. ABOVEGROUND DISTRIBUTION PIPING: TYPE L HARD COPPER TUBING, CPVC PLASTIC PIPING OR PEX PIPING.

B. BELOWGROUND DISTRIBUTION PIPING: TYPE K SOFT COPPER TUBING OR PEX PIPING INSTALLED IN PROTECTIVE PVC CONDUIT.

3.4 VALVE SCHEDULE

A. DRAWINGS INDICATE VALVE TYPES TO BE USED. WHERE SPECIFIC VALVE TYPES ARE NOT INDICATED, THE FOLLOWING REQUIREMENTS APPLY:

1. SHUTOFF DUTY: USE BRONZE BALL VALVES FOR PIPING NPS 2 AND SMALLER.
2. THROTTLING DUTY: USE BRONZE BALL VALVES FOR PIPING NPS 2 AND SMALLER.
3. HOT-WATER-PIPING, BALANCING DUTY: MEMORY-STOP BALANCING VALVES.
4. DRAIN DUTY: HOSE-END DRAIN VALVES.

B. INSTALL BALL VALVES CLOSE TO MAIN ON EACH BRANCH AND RISER SERVING TWO OR MORE PLUMBING FIXTURES OR EQUIPMENT CONNECTIONS AND WHERE INDICATED.

C. INSTALL BALL VALVES ON INLET TO EACH PLUMBING EQUIPMENT ITEM, ON EACH SUPPLY TO EACH PLUMBING FIXTURE NOT HAVING STOPS ON SUPPLIES, AND ELSEWHERE AS INDICATED.

D. INSTALL DRAIN VALVE AT BASE OF EACH RISER, AT LOW POINTS OF HORIZONTAL RUNS, AND WHERE REQUIRED TO DRAIN WATER DISTRIBUTION PIPING SYSTEM.

E. INSTALL SWING CHECK VALVE ON DISCHARGE SIDE OF EACH PUMP AND ELSEWHERE AS INDICATED.

F. INSTALL BALL VALVES IN EACH HOT-WATER CIRCULATING LOOP AND DISCHARGE SIDE OF EACH PUMP.

END OF SECTION

SECTION 221119 - DOMESTIC WATER PIPING SPECIALTIES

PART 2 - PRODUCTS

2.1 GENERAL REQUIREMENTS FOR PIPING SPECIALTIES

A. POTABLE-WATER PIPING AND COMPONENTS SHALL COMPLY WITH NSF 61AND NSF 14.

2.2 PERFORMANCE REQUIREMENTS

A. MINIMUM WORKING PRESSURE FOR DOMESTIC WATER PIPING SPECIALTIES: 125 PSIG UNLESS OTHERWISE INDICATED.

2.3 MANUFACTURED UNITS

A. PIPE-APPLIED, ATMOSPHERIC-TYPE VACUUM BREAKERS:

1. STANDARD: ASSE 1001.
2. SIZE: NPS 1/4 TO NPS 3, AS REQUIRED TO MATCH CONNECTED PIPING.
3. BODY: BRONZE.
4. INLET AND OUTLET CONNECTIONS: THREADED.
5. FINISH: CHROME PLATED.

C. REDUCED-PRESSURE-PRINCIPLE BACKFLOW PREVENTERS:

2. STANDARD: ASSE 1013.
3. OPERATION: CONTINUOUS-PRESSURE APPLICATIONS.
4. PRESSURE LOSS: 12 PSIG MAXIMUM, THROUGH MIDDLE THIRD OF FLOW RANGE.
5. BODY: LEAD FREE BRONZE OR STAINLESS STEEL FOR NPS 2 AND SMALLER.
6. END CONNECTIONS: THREADED FOR NPS 2 AND SMALLER.
7. CONFIGURATION: DESIGNED FOR HORIZONTAL, STRAIGHT-THROUGH FLOW.
8. ACCESSORIES:
   a. VALVES NPS 2 AND SMALLER: BALL TYPE WITH THREADED ENDS ON INLET AND OUTLET.
   b. AIR-GAP FITTING: ASME A112.1.2, MATCHING BACKFLOW-PREVENTER CONNECTION.

F. THERMOSTATIC, WATER MIXING VALVES:

4. STANDARD: ASSE 1017.
5. PRESSURE RATING: 125 PSIG MINIMUM UNLESS OTHERWISE INDICATED.
6. TYPE: EXPOSED-MOUNTED, THERMOSTATICALLY CONTROLLED, WATER MIXING VALVE.
7. MATERIAL: LEAD FREE BRONZE BODY WITH CORROSION-RESISTANT INTERIOR COMPONENTS.
8. CONNECTIONS: THREADED OR UNION INLETS AND OUTLET.
9. ACCESSORIES: MANUAL TEMPERATURE CONTROL, CHECK STOPS ON HOT- AND COLD-WATER SUPPLIES, AND ADJUSTABLE, TEMPERATURE-CONTROL HANDLE.
10. TEMPERED-WATER SETTING: AS SPECIFIED ON DRAWINGS.
11. PRESSURE DROP AT DESIGN FLOW RATE: NOT EXCEED 15 PSIG.
12. VALVE FINISH: CHROME PLATED.
13. PIPING FINISH: CHROME PLATED.

K. WATER-HAMMER ARRESTERS:

7. STANDARD: ASSE 1010 OR PDI-WH 201.
8. TYPE: COPPER TUBE WITH PISTON.
9. SIZE: ASSE 1010, SIZES AA AND A THROUGH F, OR PDI-WH 201, SIZES A THROUGH F.

L. SUPPLY-TYPE, TRAP-SEAL PRIMER DEVICE:

1. STANDARD: ASSE 1018
2. PRESSURE RATING: 125 PSIG MINIMUM.
3. BODY: BRONZE.
4. INLET AND OUTLET CONNECTIONS: NPS 1/2 THREADED, UNION, OR SOLDER JOINT.
5. GRAVITY DRAIN OUTLET CONNECTION: NPS 1/2 THREADED OR SOLDER JOINT.
6. FINISH: CHROME PLATED, OR ROUGH BRONZE FOR UNITS USED WITH PIPE OR TUBE THAT IS NOT CHROME FINISHED.

M. WATER FILTERS: CARTRIDGE TYPE, INCLUDING HOUSING, FITTINGS, FILTER CARTRIDGES, AND CARTRIDGE END CAPS.

PART 3 - EXECUTION

3.1 INSTALLATION

A. INSTALL BACKFLOW PREVENTERS IN EACH WATER SUPPLY TO MECHANICAL EQUIPMENT AND SYSTEMS AND TO OTHER EQUIPMENT AND WATER SYSTEMS THAT MAY BE SOURCES OF CONTAMINATION. COMPLY WITH AUTHORITIES HAVING JURISDICTION.

B. INSTALL WATER-HAMMER ARRESTERS IN WATER PIPING ACCORDING TO PDI-WH 201.

C. INSTALL SUPPLY-TYPE, TRAP-SEAL PRIMER VALVES WITH OUTLET PIPING PITCHED DOWN TOWARD DRAIN TRAP A MINIMUM OF 1 PERCENT, AND CONNECT TO FLOOR-DRAIN BODY, TRAP, OR INLET FITTING. ADJUST VALVE FOR PROPER FLOW.

3.2 FIELD QUALITY CONTROL

A. PERFORM THE FOLLOWING TESTS AND INSPECTIONS:

1. TEST EACH PRESSURE VACUUM BREAKER, REDUCED-PRESSURE-PRINCIPLE BACKFLOW PREVENTER, AND DOUBLE-CHECK BACKFLOW-PREVENTION ASSEMBLY ACCORDING TO AUTHORITIES HAVING JURISDICTION AND THE DEVICE'S REFERENCE STANDARD.
2. DOMESTIC WATER PIPING SPECIALTIES WILL BE CONSIDERED DEFECTIVE IF THEY DO NOT PASS TESTS AND INSPECTIONS.
3. PREPARE TEST AND INSPECTION REPORTS.

END OF SECTION 221119

SECTION 221316 - SANITARY WASTE AND VENT PIPING

PART 2 - PRODUCTS

2.1 PERFORMANCE REQUIREMENTS

A. COMPONENTS AND INSTALLATION SHALL BE CAPABLE OF WITHSTANDING THE FOLLOWING MINIMUM WORKING PRESSURE UNLESS OTHERWISE INDICATED:

1. SOIL, WASTE, AND VENT PIPING: 10-FOOT HEAD OF WATER.

B. PIPING MATERIALS SHALL BEAR LABEL, STAMP, OR OTHER MARKINGS OF SPECIFIED TESTING AGENCY.

C. COMPLY WITH NSF/ANSI 14, "PLASTICS PIPING SYSTEMS COMPONENTS AND RELATED MATERIALS," FOR PLASTIC PIPING COMPONENTS.

2.2 PIPES AND FITTINGS

A. PVC PLASTIC, DWV PIPE AND FITTINGS: ASTM D 2665, SCHEDULE 40, PLAIN ENDS WITH PVC SOCKET-TYPE, DWV PIPE FITTINGS.

1. ADHESIVE PRIMER: ASTM F 656.
   a. ADHESIVE PRIMER SHALL HAVE A VOC CONTENT OF 550 G/L OR LESS WHEN CALCULATED ACCORDING TO 40 CFR 59, SUBPART D (EPA METHOD 24).
2. SOLVENT CEMENT: ASTM D 2564.
   a. PVC SOLVENT CEMENT SHALL HAVE A VOC CONTENT OF 510 G/L OR LESS WHEN CALCULATED ACCORDING TO 40 CFR 59, SUBPART D (EPA METHOD 24).

PART 3 - EXECUTION

3.1 PIPING INSTALLATION

A. INSTALL WALL PENETRATION SYSTEM AT EACH PIPE PENETRATION THROUGH FOUNDATION WALL. MAKE INSTALLATION WATERTIGHT. COMPLY WITH REQUIREMENTS IN SECTION 220513 "COMMON WORK RESULTS FOR PLUMBING" FOR WALL PENETRATION SYSTEMS.

B. MAKE CHANGES IN DIRECTION FOR SOIL AND WASTE DRAINAGE AND VENT PIPING USING APPROPRIATE BRANCHES, BENDS, AND LONG-SWEEP BENDS. SANITARY TEES AND SHORT-SWEEP 1/4 BENDS MAY BE USED ON VERTICAL STACKS IF CHANGE IN DIRECTION OF FLOW IS FROM HORIZONTAL TO VERTICAL. USE LONG-TURN, DOUBLE Y-BRANCH AND 1/8-BEND FITTINGS IF TWO FIXTURES ARE INSTALLED BACK TO BACK OR SIDE BY SIDE WITH COMMON DRAIN PIPE. STRAIGHT TEES, ELBOWS, AND CROSSES MAY BE USED ON VENT LINES. DO NOT CHANGE DIRECTION OF FLOW MORE THAN 90 DEGREES. USE PROPER SIZE OF STANDARD INCREASERS AND REDUCERS IF PIPES OF DIFFERENT SIZES ARE CONNECTED. REDUCING SIZE OF DRAINAGE PIPING IN DIRECTION OF FLOW IS PROHIBITED.

C. LAY BURIED BUILDING DRAINAGE PIPING BEGINNING AT LOW POINT OF EACH SYSTEM. INSTALL TRUE TO GRADES AND ALIGNMENT INDICATED, WITH UNBROKEN CONTINUITY OF INVERT. PLACE HUB ENDS OF PIPING UPSTREAM. INSTALL REQUIRED GASKETS ACCORDING TO MANUFACTURER'S WRITTEN INSTRUCTIONS FOR USE OF LUBRICANTS, CEMENTS, AND OTHER INSTALLATION REQUIREMENTS. MAINTAIN SWAB IN PIPING AND PULL PAST EACH JOINT AS COMPLETED.

D. INSTALL SOIL AND WASTE DRAINAGE AND VENT PIPING AT THE FOLLOWING MINIMUM SLOPES, UNLESS OTHERWISE INDICATED:

1. HORIZONTAL SANITARY DRAINAGE PIPING: 2 PERCENT DOWNWARD IN DIRECTION OF FLOW FOR PIPING NPS 2-1/2 AND SMALLER; 1 PERCENT DOWNWARD IN DIRECTION OF FLOW FOR PIPING NPS 3 AND LARGER.
2. VENT PIPING: ALL VENT AND BRANCH VENT PIPING SHALL BE GRADED AND CONNECTED TO DRAIN BACK TOWARD VERTICAL FIXTURE VENT OR TOWARD VENT STACK.

G. INSTALL PVC SOIL AND WASTE DRAINAGE AND VENT PIPING ACCORDING TO ASTM D 2665.

H. INSTALL UNDERGROUND PVC SOIL AND WASTE DRAINAGE PIPING ACCORDING TO ASTM D 2321.

I. DO NOT ENCLOSE, COVER, OR PUT PIPING INTO OPERATION UNTIL IT IS INSPECTED AND APPROVED BY AUTHORITIES HAVING JURISDICTION.

J. COMPLY WITH REQUIREMENTS IN SECTION 220513 "COMMON WORK RESULTS FOR PLUMBING" FOR BASIC PIPING JOINT CONSTRUCTION.

K. COMPLY WITH REQUIREMENTS IN SECTION 220513 "COMMON WORK RESULTS FOR PLUMBING" FOR PIPE HANGER AND SUPPORT DEVICES.

3.2 PIPE SCHEDULE

A. ABOVEGROUND APPLICATIONS: PVC PLASTIC, DWV PIPE AND FITTINGS WITH SOLVENT-CEMENTED JOINTS. COPPER DRAINAGE TUBE AND FITTINGS WITH SOLDERED JOINTS. PVC PLASTIC PIPE AND FITTINGS SHALL NOT BE PERMITTED FOR INSTALLATION IN RETURN AIR PLENUMS OR LOCATIONS EXPOSED TO RETURN AIR PLENUMS.

B. BELOWGROUND APPLICATIONS: PVC PLASTIC, DWV PIPE AND DRAINAGE-PATTERN FITTINGS WITH CEMENTED JOINTS.

END OF SECTION

SECTION 221319 - SANITARY WASTE PIPING SPECIALTIES

PART 1 - GENERAL

1.1 SECTION REQUIREMENTS

A. SUBMITTALS:

1. PRODUCT DATA: FOR EACH TYPE OF PRODUCT INDICATED.
   a. INCLUDE RATED CAPACITIES, OPERATING CHARACTERISTICS, AND ACCESSORIES FOR GREASE INTERCEPTORS.

PART 2 - PRODUCTS

2.1 PERFORMANCE REQUIREMENTS

A. DRAINAGE PIPING SPECIALTIES SHALL BEAR LABEL, STAMP, OR OTHER MARKINGS OF SPECIFIED TESTING AGENCY.

2.2 MANUFACTURED UNITS - AS INDICATED ON DRAWINGS

A. FLOOR CLEANOUTS: PER STANDARD ASME A112.36.2M-2002.
B. WALL CLEANOUTS:
C. FLOOR DRAINS: PER STANDARD ASME A112.6.3-2001.
D. CAST IRON FLOOR SINKS: PER STANDARD ASME A112.6.7-2001.
E. PVC PLASTIC FLOOR SINKS: PER STANDARD ASME A112.6.7-2001.

PART 3 - EXECUTION

3.1 INSTALLATION

A. INSTALL CLEANOUTS AT GRADE AND EXTEND TO WHERE BUILDING SANITARY DRAINS CONNECT TO BUILDING SANITARY SEWERS.

B. INSTALL FLOOR DRAINS AT LOW POINTS OF SURFACE AREAS TO BE DRAINED. SET GRATES OF DRAINS FLUSH WITH FINISHED FLOOR UNLESS OTHERWISE INDICATED.

1. INSTALL FLOOR-DRAIN FLASHING COLLAR OR FLANGE SO NO LEAKAGE OCCURS BETWEEN DRAIN AND ADJOINING FLOORING. MAINTAIN INTEGRITY OF WATERPROOF MEMBRANES WHERE PENETRATED.
2. INSTALL INDIVIDUAL TRAPS FOR FLOOR DRAINS CONNECTED TO SANITARY BUILDING DRAIN, UNLESS OTHERWISE INDICATED.

C. PROVIDE A 2" MINIMUM AIR-GAP OR 2 TIMES THE PIPE DIAMETER (WHICHEVER IS GREATER) ON INDIRECT-WASTE PIPING DISCHARGE INTO SANITARY DRAINAGE SYSTEM.

END OF SECTION

SECTION 224000 - PLUMBING FIXTURES

PART 1 - GENERAL

1.1 SECTION REQUIREMENTS

A. SUBMITTALS:

1. PRODUCT DATA FOR EACH TYPE OF PLUMBING FIXTURE, INCLUDING TRIM, FITTINGS, ACCESSORIES, APPLIANCES, APPURTENANCES, EQUIPMENT, AND SUPPORTS.
2. DOCUMENTATION INDICATING FLOW AND WATER CONSUMPTION REQUIREMENTS.

PART 2 - PRODUCTS

2.1 PERFORMANCE REQUIREMENTS

A. REGULATORY REQUIREMENTS: COMPLY WITH REQUIREMENTS IN ICC A117.1, "ACCESSIBLE AND USABLE BUILDINGS AND FACILITIES"; PUBLIC LAW 90-480, "ARCHITECTURAL BARRIERS ACT"; AND PUBLIC LAW 101-336, "AMERICANS WITH DISABILITIES ACT" FOR PLUMBING FIXTURES FOR PEOPLE WITH DISABILITIES.

B. REGULATORY REQUIREMENTS: COMPLY WITH REQUIREMENTS IN PUBLIC LAW 102-486, "ENERGY POLICY ACT," ABOUT WATER FLOW AND CONSUMPTION RATES FOR PLUMBING FIXTURES.

C. NSF STANDARD: COMPLY WITH NSF 61, "DRINKING WATER SYSTEM COMPONENTS - HEALTH EFFECTS;" FOR FIXTURE MATERIALS THAT WILL BE IN CONTACT WITH POTABLE WATER.

D. FIXTURES SHALL BE PROVIDED AS SCHEDULED ON THE DRAWINGS.

PART 3 - EXECUTION

3.1 INSTALLATIONS

A. INSTALL FITTING INSULATION KITS ON FIXTURES FOR PEOPLE WITH DISABILITIES.

B. INSTALL FIXTURES WITH FLANGES AND GASKET SEALS.

C. INSTALL TANKS FOR ACCESSIBLE, TANK-TYPE WATER CLOSETS WITH LEVER HANDLE MOUNTED ON WIDE SIDE OF COMPARTMENT.

D. FASTEN WALL-HANGING PLUMBING FIXTURES SECURELY TO SUPPORTS ATTACHED TO BUILDING SUBSTRATE WHEN SUPPORTS ARE SPECIFIED, AND TO BUILDING WALL CONSTRUCTION WHERE NO SUPPORT IS INDICATED.

E. FASTEN FLOOR-MOUNTED FIXTURES TO SUBSTRATE. FASTEN FIXTURES HAVING HOLES FOR SECURING FIXTURE TO WALL CONSTRUCTION, TO REINFORCEMENT BUILT INTO WALLS.

F. FASTEN WALL-MOUNTED FITTINGS TO REINFORCEMENT BUILT INTO WALLS.

G. FASTEN COUNTER-MOUNTING PLUMBING FIXTURES TO CASEWORK.

H. SECURE SUPPLIES TO SUPPORTS OR SUBSTRATE WITHIN PIPE SPACE BEHIND FIXTURE.

I. SET MOP BASINS IN LEVELING BED OF CEMENT GROUT.

J. INSTALL INDIVIDUAL SUPPLY INLETS, SUPPLY STOPS, SUPPLY RISERS, AND TUBULAR BRASS TRAPS WITH CLEANOUTS AT FIXTURE.

K. INSTALL WATER-SUPPLY STOP VALVES IN ACCESSIBLE LOCATIONS.

L. INSTALL TRAPS ON FIXTURE OUTLETS. OMIT TRAPS ON FIXTURES HAVING INTEGRAL TRAPS. OMIT TRAPS ON INDIRECT WASTES UNLESS OTHERWISE INDICATED.

M. INSTALL ESCUTCHEONS AT WALL, FLOOR, AND CEILING PENETRATIONS IN EXPOSED, FINISHED LOCATIONS AND WITHIN CABINETS AND MILLWORK. USE DEEP-PATTERN ESCUTCHEONS WHERE REQUIRED TO CONCEAL PROTRUDING PIPE FITTINGS.

N. SEAL JOINTS BETWEEN FIXTURES AND WALLS, FLOORS, AND COUNTERS USING SANITARY-TYPE, ONE-PART, MILDEW-RESISTANT, SILICONE SEALANT. MATCH SEALANT COLOR TO FIXTURE COLOR.

O. INSTALL PIPING CONNECTIONS BETWEEN PLUMBING FIXTURES AND PIPING SYSTEMS AND PLUMBING EQUIPMENT. INSTALL INSULATION ON SUPPLIES AND DRAINS OF FIXTURES FOR PEOPLE WITH DISABILITIES.

END OF SECTION

SECTION 221423 - STORM DRAINAGE PIPING SPECIALTIES

PART 2 - PRODUCTS

2.1 METAL ROOF DRAINS

A. CAST-IRON, LARGE-SUMP, GENERAL-PURPOSE ROOF DRAINS

1. MANUFACTURERS: SUBJECT TO COMPLIANCE WITH REQUIREMENTS, PROVIDE PRODUCTS BY ONE OF THE FOLLOWING:
   a. MARATHON ROOFING PRODUCTS.
   b. MIFAB, INC.
   c. SMITH, JAY R. MFG. CO.
   d. TYLER PIPE.
   e. WATTS WATER TECHNOLOGIES, INC.
   f. ZURN PLUMBING PRODUCTS GROUP; SPECIFICATION DRAINAGE OPERATION.
2. STANDARD: ASME A112.6.4, FOR GENERAL-PURPOSE ROOF DRAINS.
3. BODY MATERIAL: CAST IRON
4. DIMENSION OF BODY: NOMINAL 14-INCH DIAMETER.
5. COMBINATION FLASHING RING AND GRAVEL STOP: REQUIRED.
6. FLOW-CONTROL WEIRS: REQUIRED.
7. OUTLET: BOTTOM
8. EXTENSION COLLARS: REQUIRED.
9. UNDERDECK CLAMP: REQUIRED.
10. EXPANSION JOINT: REQUIRED.
11. SUMP RECEIVER PLATE: REQUIRED.
12. DOME MATERIAL: CAST IRON
13. PERFORATED GRAVEL GUARD: STAINLESS STEEL.
14. VANDAL-PROOF DOME: REQUIRED.
15. WATER DAM: 2 INCHES HIGH.

2.3 MISCELLANEOUS STORM DRAINAGE PIPING SPECIALTIES

A. DOWNSPOUT ADAPTORS:

1. DESCRIPTION: MANUFACTURED, GRAY-IRON CASTING, FOR ATTACHING TO HORIZONTAL-OUTLET, PARAPET ROOF DRAIN AND TO EXTERIOR, SHEET METAL DOWNSPOUT.
2. SIZE: INLET SIZE TO MATCH PARAPET DRAIN OUTLET.

B. DOWNSPOUT BOOTS:

1. DESCRIPTION: MANUFACTURED, ASTM A 48/A 48M, GRAY-IRON CASTING, WITH STRAP OR EARS FOR ATTACHING TO BUILDING; NPS 4 (DN 100) OUTLET; AND SHOP-APPLIED BITUMINOUS COATING.
2. SIZE: INLET SIZE TO MATCH DOWNSPOUT AND NPS 4 (DN 100) OUTLET.

C. CONDUCTOR NOZZLES:

1. DESCRIPTION: BRONZE BODY WITH THREADED INLET AND BRONZE WALL FLANGE WITH MOUNTING HOLES.
2. SIZE: SAME AS CONNECTED CONDUCTOR.

2.4 CLEANOUTS

A. FLOOR CLEANOUTS:

1. MANUFACTURERS: SUBJECT TO COMPLIANCE WITH REQUIREMENTS, PROVIDE PRODUCTS BY ONE OF THE FOLLOWING:
2. BASIS-OF-DESIGN PRODUCT: SUBJECT TO COMPLIANCE WITH REQUIREMENTS, PROVIDE PRODUCT INDICATED ON DRAWINGS OR COMPARABLE PRODUCT BY ONE OF THE FOLLOWING:
   a. JOSAM COMPANY.
   b. OATEY.
   c. SIOUX CHIEF MANUFACTURING COMPANY, INC.
   d. SMITH, JAY R. MFG. CO.
   e. TYLER PIPE.
   f. WATTS WATER TECHNOLOGIES, INC.
   g. ZURN PLUMBING PRODUCTS GROUP; LIGHT COMMERCIAL PRODUCTS OPERATION.
   h. ZURN PLUMBING PRODUCTS GROUP; SPECIFICATION DRAINAGE OPERATION.
3. STANDARD: ASME A112.36.2M, FOR HEAVY-DUTY, ADJUSTABLE HOUSING CLEANOUTS.
4. SIZE: SAME AS CONNECTED BRANCH.
5. TYPE: HEAVY-DUTY, ADJUSTABLE HOUSING.
6. BODY OR FERRULE MATERIAL: CAST IRON.
7. CLAMPING DEVICE: REQUIRED.
8. OUTLET CONNECTION: THREADED.
9. CLOSURE: CAST-IRON PLUG.
10. ADJUSTABLE HOUSING MATERIAL: CAST IRON WITH THREADS.
11. FRAME AND COVER MATERIAL AND FINISH: PAINTED CAST IRON.
12. FRAME AND COVER SHAPE: ROUND.
13. TOP-LOADING CLASSIFICATION: HEAVY DUTY.
14. RISER: ASTM A 74, EXTRA-HEAVY CLASS, CAST-IRON DRAINAGE PIPE FITTING AND RISER TO CLEANOUT.

B. TEST TEES:

1. MANUFACTURERS: SUBJECT TO COMPLIANCE WITH REQUIREMENTS, PROVIDE PRODUCTS BY ONE OF THE FOLLOWING:
2. BASIS-OF-DESIGN PRODUCT: SUBJECT TO COMPLIANCE WITH REQUIREMENTS, PROVIDE PRODUCT INDICATED ON DRAWINGS OR COMPARABLE PRODUCT BY ONE OF THE FOLLOWING:
   a. JOSAM COMPANY.
   b. MIFAB, INC.
   c. SMITH, JAY R. MFG. CO.
   d. TYLER PIPE.
   e. WATTS WATER TECHNOLOGIES, INC.
   f. ZURN PLUMBING PRODUCTS GROUP; SPECIFICATION DRAINAGE OPERATION.
3. STANDARD: ASME A112.36.2M AND ASTM A 74, ASTM A 888, OR CISPI 301, FOR CLEANOUT TEST TEES.
4. SIZE: SAME AS CONNECTED DRAINAGE PIPING.
5. BODY MATERIAL: HUB-AND-SPIGOT, CAST-IRON SOIL-PIPE T-BRANCH OR HUBLESS, CAST-IRON SOIL-PIPE TEST TEE AS REQUIRED TO MATCH CONNECTED PIPING.
6. CLOSURE PLUG: COUNTERSUNK, BRASS.
7. CLOSURE PLUG SIZE: SAME AS OR NOT MORE THAN ONE SIZE SMALLER THAN CLEANOUT SIZE.

C. WALL CLEANOUTS:

1. MANUFACTURERS: SUBJECT TO COMPLIANCE WITH REQUIREMENTS, PROVIDE PRODUCTS BY ONE OF THE FOLLOWING:
2. BASIS-OF-DESIGN PRODUCT: SUBJECT TO COMPLIANCE WITH REQUIREMENTS, PROVIDE PRODUCT INDICATED ON DRAWINGS OR COMPARABLE PRODUCT BY ONE OF THE FOLLOWING:
   a. JOSAM COMPANY.
   b. MIFAB, INC.
   c. SMITH, JAY R. MFG. CO.
   d. TYLER PIPE.
   e. WATTS WATER TECHNOLOGIES, INC.
   f. ZURN PLUMBING PRODUCTS GROUP; SPECIFICATION DRAINAGE OPERATION.
3. STANDARD: ASME A112.36.2M, FOR CLEANOUTS. INCLUDE WALL ACCESS.
4. SIZE: SAME AS CONNECTED DRAINAGE PIPING.
5. BODY MATERIAL: HUBLESS, CAST-IRON SOIL-PIPE TEST TEE AS REQUIRED TO MATCH CONNECTED PIPING.
6. CLOSURE: COUNTERSUNK OR RAISED-HEAD PLUG.
7. CLOSURE PLUG SIZE: SAME AS OR NOT MORE THAN ONE SIZE SMALLER THAN CLEANOUT SIZE.
8. WALL ACCESS: ROUND, DEEP, CHROME-PLATED BRONZE COVER PLATE WITH SCREW.
9. WALL ACCESS: ROUND, NICKEL-BRONZE, COPPER-ALLOY, OR STAINLESS-STEEL WALL-INSTALLATION FRAME AND COVER.

D. PLASTIC FLOOR CLEANOUTS:

1. MANUFACTURERS: SUBJECT TO COMPLIANCE WITH REQUIREMENTS, PROVIDE PRODUCTS BY ONE OF THE FOLLOWING:
2. BASIS-OF-DESIGN PRODUCT: SUBJECT TO COMPLIANCE WITH REQUIREMENTS, PROVIDE PRODUCT INDICATED ON DRAWINGS OR COMPARABLE PRODUCT BY ONE OF THE FOLLOWING:
   a. CANPLAS LLC.
   b. IPS CORPORATION.
   c. NDS INC.
   d. PLASTIC ODDITIES; A DIVISION OF DIVERSE CORPORATE TECHNOLOGIES.
   e. SIOUX CHIEF MANUFACTURING COMPANY, INC.
   f. ZURN PLUMBING PRODUCTS GROUP; LIGHT COMMERCIAL PRODUCTS OPERATION.
3. SIZE: SAME AS CONNECTED BRANCH.
4. BODY MATERIAL: PVC.
5. CLOSURE PLUG: PVC.
6. RISER: DRAINAGE PIPE FITTING AND RISER TO CLEANOUT OF SAME MATERIAL AS DRAINAGE PIPING.

2.8 THROUGH-PENETRATION FIRESTOP ASSEMBLIES

A. THROUGH-PENETRATION FIRESTOP ASSEMBLIES:

1. MANUFACTURERS: SUBJECT TO COMPLIANCE WITH REQUIREMENTS, PROVIDE PRODUCTS BY ONE OF THE FOLLOWING:
2. BASIS-OF-DESIGN PRODUCT: SUBJECT TO COMPLIANCE WITH REQUIREMENTS, PROVIDE PRODUCT INDICATED ON DRAWINGS OR COMPARABLE PRODUCT BY ONE OF THE FOLLOWING:
   a. PROSET SYSTEMS INC.
3. STANDARD: ASTM E 814, FOR THROUGH-PENETRATION FIRESTOP ASSEMBLIES.
4. CERTIFICATION AND LISTING: INTERTEK TESTING SERVICE NA FOR THROUGH-PENETRATION FIRESTOP ASSEMBLIES.
5. SIZE: SAME AS CONNECTED PIPE.
6. SLEEVE: MOLDED PVC PLASTIC, OF LENGTH TO MATCH SLAB THICKNESS AND WITH INTEGRAL NAILING FLANGE ON ONE END FOR INSTALLATION IN CAST-IN-PLACE CONCRETE SLABS.

Consultant:
annex ENGINEERING GROUP
589 w nationwide blvd ste b
columbus, ohio 43215
tel: 614.481.2292
fax: 614.487.8777

BID SET

NOT FOR CONSTRUCTION

COPYRIGHT 2026
ALL DRAWINGS AND SPECIFICATIONS SHALL REMAIN THE PROPERTY OF ANNEX ENGINEERING GROUP AND MAY NOT BE USED, DUPLICATED, OR ALTERED WITHOUT THE WRITTEN CONSENT OF THE ENGINEER.

ECP PARTNERS

ECP PARTNERS, LLC
4362 NORTHLAKE BLVD, SUITE 213
PALM BEACH GARDENS, FL 33410

CMG HIGHLAND CITY SHELL, FL
TBD US 98
LAKELAND, FL 33812

Issue Record:

02.25.2026	PERMIT SET
02.25.2026	BID SET

Revisions:

Drawn: AB
Checked: SS

Project No.
EPL002

Contents:
SPECIFICATIONS
PLUMBING SHELL

P720

SPECIFICATIONS - DIVISION 22 - PLUMBING

1. STACK FITTING: ASTM A 48/A 48M, GRAY-IRON, HUBLESS-PATTERN, WYE BRANCH WITH NEOPRENE O-RING AT BASE AND GRAY-IRON PLUG IN THERMAL-RELEASE HARNESS. INCLUDE PVC PROTECTIVE CAP FOR PLUG.
2. SPECIAL COATING: CORROSION RESISTANT ON INTERIOR OF FITTINGS.

2.9 FLASHING MATERIALS

A. COPPER SHEET: ASTM B 152/B 152M.12 OZ./SQ. FT.

B. ZINC-COATED STEEL SHEET: ASTM A 653/A 653M, WITH 0.20 PERCENT COPPER CONTENT AND 0.04-INCH MINIMUM THICKNESS UNLESS OTHERWISE INDICATED. INCLUDE G90 HOT-DIP GALVANIZED, MILL-PHOSPHATIZED FINISH FOR PAINTING IF INDICATED.

C. ELASTIC MEMBRANE SHEET: ASTM D 4068, FLEXIBLE, CHLORINATED POLYETHYLENE, 40-MIL MINIMUM THICKNESS.

D. FASTENERS: METAL COMPATIBLE WITH MATERIAL AND SUBSTRATE BEING FASTENED.

E. METAL ACCESSORIES: SHEET METAL STRIPS, CLAMPS, ANCHORING DEVICES, AND SIMILAR ACCESSORY UNITS REQUIRED FOR INSTALLATION; MATCHING OR COMPATIBLE WITH MATERIAL BEING INSTALLED.

F. SOLDER: ASTM B 32, LEAD-FREE ALLOY.

PART 3 - EXECUTION

3.1 INSTALLATION

G. INSTALL ROOF DRAINS AT LOW POINTS OF ROOF AREAS ACCORDING TO ROOF MEMBRANE MANUFACTURER'S WRITTEN INSTALLATION INSTRUCTIONS.

1. INSTALL FLASHING COLLAR OR FLANGE OF ROOF DRAIN TO PREVENT LEAKAGE BETWEEN DRAIN AND ADJOINING ROOFING. MAINTAIN INTEGRITY OF WATERPROOF MEMBRANES WHERE PENETRATED.
2. INSTALL EXPANSION JOINTS, IF INDICATED, IN ROOF DRAIN OUTLETS.
3. POSITION ROOF DRAINS FOR EASY ACCESS AND MAINTENANCE.

B. INSTALL DOWNSPOUT ADAPTERS ON OUTLET OF BACK-OUTLET PARAPET ROOF DRAINS AND CONNECT TO SHEET METAL DOWNSPOUTS.

C. INSTALL DOWNSPOUT BOOTS AT GRADE WITH TOP 12 INCHES ABOVE GRADE. SECURE TO BUILDING WALL.

D. INSTALL CONDUCTOR NOZZLES AT EXPOSED BOTTOM OF CONDUCTORS WHERE THEY SPILL ONTO GRADE.

E. INSTALL CLEANOUTS IN ABOVEGROUND PIPING AND BUILDING DRAIN PIPING ACCORDING TO THE FOLLOWING INSTRUCTIONS UNLESS OTHERWISE INDICATED:

1. USE CLEANOUTS THE SAME SIZE AS DRAINAGE PIPING UP TO NPS 4. USE NPS 4 FOR LARGER DRAINAGE PIPING UNLESS LARGER CLEANOUT IS INDICATED.
2. LOCATE CLEANOUTS AT EACH CHANGE IN DIRECTION OF PIPING GREATER THAN 45 DEGREES.
3. LOCATE CLEANOUTS AT MINIMUM INTERVALS OF 50 FEET FOR PIPING NPS 4 AND SMALLER AND 100 FEET FOR LARGER PIPING.
4. LOCATE CLEANOUTS AT BASE OF EACH VERTICAL SOIL AND WASTE STACK.

F. FOR FLOOR CLEANOUTS FOR PIPING BELOW FLOORS, INSTALL CLEANOUT DECK PLATES WITH TOP FLUSH WITH FINISHED FLOOR.

G. FOR CLEANOUTS LOCATED IN CONCEALED PIPING, INSTALL CLEANOUT WALL ACCESS COVERS, OF TYPES INDICATED, WITH FRAME AND COVER FLUSH WITH FINISHED WALL.

H. INSTALL HORIZONTAL BACKWATER VALVES IN FLOOR WITH COVER FLUSH WITH FLOOR.

I. INSTALL DRAIN-OUTLET BACKWATER VALVES IN OUTLET OF DRAINS.

J. INSTALL TEST TEES IN VERTICAL CONDUCTORS AND NEAR FLOOR.

K. INSTALL WALL CLEANOUTS IN VERTICAL CONDUCTORS. INSTALL ACCESS DOOR IN WALL IF INDICATED.

L. INSTALL TRENCH DRAINS AT LOW POINTS OF SURFACE AREAS TO BE DRAINED. SET GRATES OF DRAINS FLUSH WITH FINISHED SURFACE UNLESS OTHERWISE INDICATED.

M. ASSEMBLE CHANNEL DRAINAGE SYSTEM COMPONENTS ACCORDING TO MANUFACTURER'S WRITTEN INSTRUCTIONS. INSTALL ON SUPPORT DEVICES SO THAT TOP WILL BE FLUSH WITH ADJACENT SURFACE.

N. INSTALL THROUGH-PENETRATION FIRESTOP ASSEMBLIES IN PLASTIC CONDUCTORS AT CONCRETE FLOOR PENETRATIONS.

O. INSTALL SLEEVE FLASHING DEVICE WITH EACH CONDUCTOR PASSING THROUGH FLOORS WITH WATERPROOF MEMBRANE.

3.2 CONNECTIONS

A. COMPLY WITH REQUIREMENTS FOR PIPING SPECIFIED IN SECTION 221413 "FACILITY STORM DRAINAGE PIPING." DRAWINGS INDICATE GENERAL ARRANGEMENT OF PIPING, FITTINGS, AND SPECIALTIES.

3.3 FLASHING INSTALLATION

A. FABRICATE FLASHING FROM SINGLE PIECE OF METAL UNLESS LARGE PANS, SUMPS, OR OTHER DRAINAGE SHAPES ARE REQUIRED. JOIN FLASHING ACCORDING TO THE FOLLOWING IF REQUIRED:

1. LEAD SHEETS: BURN JOINTS OF 6.0-LB/SQ. FT. LEAD SHEETS, 0.0938-INCH THICKNESS OR THICKER. SOLDER JOINTS OF 4.0-LB/SQ. FT. LEAD SHEETS, 0.0625-INCH THICKNESS OR THINNER.
2. COPPER SHEETS: SOLDER JOINTS OF COPPER SHEETS.

B. INSTALL SHEET FLASHING ON PIPES, SLEEVES, AND SPECIALTIES PASSING THROUGH OR EMBEDDED IN FLOORS AND ROOFS WITH WATERPROOF MEMBRANE.

1. PIPE FLASHING: SLEEVE TYPE, MATCHING THE PIPE SIZE, WITH A MINIMUM LENGTH OF 10 INCHES AND WITH SKIRT OR FLANGE EXTENDING AT LEAST 8 INCHES AROUND PIPE.
2. SLEEVE FLASHING: FLAT SHEET, WITH SKIRT OR FLANGE EXTENDING AT LEAST 8 INCHES AROUND SLEEVE.
3. EMBEDDED SPECIALTY FLASHING: FLAT SHEET, WITH SKIRT OR FLANGE EXTENDING AT LEAST 8 INCHES AROUND SPECIALTY.

C. SET FLASHING ON FLOORS AND ROOFS IN SOLID COATING OF BITUMINOUS CEMENT.

D. SECURE FLASHING INTO SLEEVE AND SPECIALTY CLAMPING RING OR DEVICE.

E. FABRICATE AND INSTALL FLASHING AND PANS, SUMPS, AND OTHER DRAINAGE SHAPES.

3.4 PROTECTION

A. PROTECT DRAINS DURING REMAINDER OF CONSTRUCTION PERIOD TO AVOID CLOGGING WITH DIRT OR DEBRIS AND TO PREVENT DAMAGE FROM TRAFFIC OR CONSTRUCTION WORK.

B. PLACE PLUGS IN ENDS OF UNCOMPLETED PIPING AT END OF EACH DAY OR WHEN WORK STOPS.

END OF SECTION 221423

SECTION 221623 - FACILITY NATURAL-GAS PIPING

PART 2 - PRODUCTS

2.1 PERFORMANCE REQUIREMENTS

A. MINIMUM OPERATING-PRESSURE RATINGS:

1. PIPING AND VALVES: 100 PSIG MINIMUM UNLESS OTHERWISE INDICATED.

B. NATURAL-GAS SYSTEM PRESSURE WITHIN BUILDING: ONE DISTRIBUTION PRESSURE. 14" W.C., BUT NOT MORE THAN 2.0 PSIG.

2.2 PIPES, TUBES, AND FITTINGS

A. STEEL PIPE: ASTM A 53/A 53M, BLACK STEEL, SCHEDULE 40, TYPE E OR S, GRADE B.

1. MALLEABLE-IRON THREADED FITTINGS: ASME B16.3, CLASS 150, STANDARD PATTERN.
2. WROUGHT-STEEL WELDING FITTINGS: ASTM A 234/A 234M FOR BUTT WELDING AND SOCKET WELDING.
3. UNIONS: ASME B16.39, CLASS 150, MALLEABLE IRON WITH BRASS-TO-IRON SEAT, GROUND JOINT, AND THREADED ENDS.
4. PROTECTIVE COATING FOR UNDERGROUND PIPING: FACTORY-APPLIED, THREE-LAYER COATING OF EPOXY, ADHESIVE, AND PE.

B. CORRUGATED, STAINLESS-STEEL TUBING: COMPLY WITH ANSI/IAS LC 1; INCLUDE FLAME-RETARDANT PE COATING, COPPER-ALLOY THREADED ENDS, AND STRIKER PLATES.

2.3 SPECIALTIES

A. APPLIANCE FLEXIBLE CONNECTORS:

1. INDOOR, FIXED-APPLIANCE FLEXIBLE CONNECTORS: COMPLY WITH ANSI Z21.24.
2. INDOOR, MOVABLE-APPLIANCE FLEXIBLE CONNECTORS: COMPLY WITH ANSI Z21.69.
3. OUTDOOR, APPLIANCE FLEXIBLE CONNECTORS: COMPLY WITH ANSI Z21.75.
4. CORRUGATED STAINLESS-STEEL TUBING WITH POLYMER COATING.

B. STRAINERS: ASTM A 126, CLASS B, CAST-IRON BODY, Y-PATTERN, FULL SIZE OF CONNECTING PIPING, CWP RATING OF 125 PSIG, INCLUDE 40-MESH STARTUP STRAINER, AND PERFORATED STAINLESS-STEEL BASKET.

C. WEATHERPROOF VENT CAP: CAST- OR MALLEABLE-IRON INCREASER FITTING WITH CORROSION-RESISTANT WIRE SCREEN, WITH FREE AREA AT LEAST EQUAL TO CROSS-SECTIONAL AREA OF CONNECTING PIPE AND THREADED-END CONNECTION.

2.4 VALVES

A. GENERAL REQUIREMENTS FOR METALLIC MANUAL GAS SHUTOFF VALVES: COMPLY WITH ASME B16.33.

1. CWP RATING: 125 PSIG.

B. ONE-PIECE, BRONZE BALL VALVE WITH BRONZE TRIM: MSS SP-110.

1. BODY: BRONZE, COMPLYING WITH ASTM B 584.
2. BALL: CHROME-PLATED BRASS.
3. STEM: BRONZE; BLOWOUT PROOF.
4. SEATS: REINFORCED TFE; BLOWOUT PROOF.
5. PACKING: SEPARATE PACKNUT WITH ADJUSTABLE STEM PACKING THREADED ENDS.
6. CWP RATING: 600 PSIG.
7. LISTING: VALVES NPS 1 AND SMALLER SHALL BE LISTED AND LABELED BY AN NRTL ACCEPTABLE TO AUTHORITIES HAVING JURISDICTION.
8. SERVICE: SUITABLE FOR NATURAL-GAS SERVICE WITH "WOG" INDICATED ON VALVE BODY.

C. TWO-PIECE, FULL-PORT, BRONZE BALL VALVES WITH BRONZE TRIM: MSS SP-110.

1. BODY: BRONZE, COMPLYING WITH ASTM B 584.
2. BALL: CHROME-PLATED BRONZE.
3. STEM: BRONZE; BLOWOUT PROOF.
4. SEATS: REINFORCED TFE; BLOWOUT PROOF.
5. PACKING: THREADED BODY PACKNUT DESIGN WITH ADJUSTABLE STEM PACKING.
6. CWP RATING: 600 PSIG.
7. LISTING: VALVES NPS 1 AND SMALLER SHALL BE LISTED AND LABELED BY AN NRTL ACCEPTABLE TO AUTHORITIES HAVING JURISDICTION.
8. SERVICE: SUITABLE FOR NATURAL-GAS SERVICE WITH "WOG" INDICATED ON VALVE BODY.

D. BRONZE PLUG VALVES: MSS SP-78.

1. BODY: BRONZE, COMPLYING WITH ASTM B 584.
2. PLUG: BRONZE.
3. OPERATOR: SQUARE HEAD OR LUG TYPE WITH TAMPERPROOF FEATURE WHERE INDICATED.
4. PRESSURE CLASS: 125 PSIG.
5. LISTING: VALVES NPS 1 AND SMALLER SHALL BE LISTED AND LABELED BY AN NRTL ACCEPTABLE TO AUTHORITIES HAVING JURISDICTION.
6. SERVICE: SUITABLE FOR NATURAL-GAS SERVICE WITH "WOG" INDICATED ON VALVE BODY.

E. CAST-IRON, NONLUBRICATED PLUG VALVES: MSS SP-78.

1. BODY: CAST IRON, COMPLYING WITH ASTM A 126, CLASS B.
2. PLUG: BRONZE OR NICKEL-PLATED CAST IRON.
3. SEAT: COATED WITH THERMOPLASTIC.
4. STEM SEAL: COMPATIBLE WITH NATURAL GAS.
5. OPERATOR: SQUARE HEAD OR LUG TYPE WITH TAMPERPROOF FEATURE WHERE INDICATED.
6. PRESSURE CLASS: 125 PSIG.
7. LISTING: VALVES NPS 1 AND SMALLER SHALL BE LISTED AND LABELED BY AN NRTL ACCEPTABLE TO AUTHORITIES HAVING JURISDICTION.
8. SERVICE: SUITABLE FOR NATURAL-GAS SERVICE WITH "WOG" INDICATED ON VALVE BODY.

F. ELECTRICALLY OPERATED, AUTOMATIC GAS VALVES: COMPLY WITH UL 429.

2.5 PRESSURE REGULATORS

A. GENERAL REQUIREMENTS: SINGLE STAGE, STEEL JACKETED, AND CORROSION RESISTANT, INCLUDE ELEVATION COMPENSATOR.

B. LINE PRESSURE REGULATORS: ANSI Z21.80; 2-PSIG MAXIMUM INLET PRESSURE. FACTORY- OR FIELD-INSTALLED, STAINLESS-STEEL SCREEN IN VENT OPENING IF NOT CONNECTED TO VENT PIPING.

C. APPLIANCE PRESSURE REGULATORS: ANSI Z21.18; 2-PSIG MAXIMUM INLET PRESSURE. REGULATOR MAY INCLUDE VENT LIMITING DEVICE, INSTEAD OF VENT CONNECTION, IF APPROVED BY AUTHORITIES HAVING JURISDICTION.

PART 3 - EXECUTION

3.1 INDOOR PIPING INSTALLATION

A. COMPLY WITH REQUIREMENTS IN SECTION 220500 "COMMON WORK RESULTS FOR PLUMBING" FOR BASIC PIPING INSTALLATION REQUIREMENTS.

B. INSTALL PIPING IN CONCEALED LOCATIONS UNLESS OTHERWISE INDICATED AND EXCEPT IN EQUIPMENT ROOMS AND SERVICE AREAS.

C. INSTALL ESCUTCHEONS AT PENETRATIONS OF INTERIOR WALLS, CEILINGS, AND FLOORS.

D. FIRE-BARRIER PENETRATIONS: MAINTAIN INDICATED FIRE RATING OF WALLS, PARTITIONS, CEILINGS, AND FLOORS AT PIPE PENETRATIONS. SEAL PIPE PENETRATIONS WITH FIRESTOP MATERIALS. COMPLY WITH REQUIREMENTS IN SECTION 078413 "PENETRATION FIRESTOPPING."

E. INSTALL GAS STOPS FOR SHUTOFF TO APPLIANCES WITH LOW-PRESSURE GAS SUPPLY.

F. INSTALL NATURAL-GAS PIPING AT UNIFORM GRADE OF 2 PERCENT DOWN TOWARD DRIP AND SEDIMENT TRAPS.

G. USE ECCENTRIC REDUCER FITTINGS TO MAKE REDUCTIONS IN PIPE SIZES. INSTALL FITTINGS WITH LEVEL SIDE DOWN.

H. CONNECT BRANCH PIPING FROM TOP OR SIDE OF HORIZONTAL PIPING.

I. INSTALL UNIONS IN PIPES NPS 2 AND SMALLER, ADJACENT TO EACH VALVE, AT FINAL CONNECTION TO EACH PIECE OF EQUIPMENT. UNIONS ARE NOT REQUIRED AT FLANGED CONNECTIONS.

J. INSTALL STRAINER ON INLET OF EACH LINE PRESSURE REGULATOR AND AUTOMATIC OR ELECTRICALLY OPERATED VALVE.

K. INSTALL PRESSURE GAGE PLUG UPSTREAM AND DOWNSTREAM FROM EACH LINE REGULATOR.

L. CONNECT GAS PIPING TO EQUIPMENT AND APPLIANCES WITH SHUTOFF VALVES AND UNIONS. INSTALL GAS VALVE UPSTREAM FROM AND WITHIN 72 INCHES OF EACH APPLIANCE USING GAS. INSTALL UNION OR FLANGED CONNECTIONS DOWNSTREAM FROM VALVES.

M. EXTEND RELIEF VENT CONNECTIONS FOR SERVICE REGULATORS, LINE REGULATORS, AND OVERPRESSURE PROTECTION DEVICES TO THE OUTDOORS AND TERMINATE WITH WEATHERPROOF VENT CAP.

N. DO NOT USE NATURAL-GAS PIPING AS GROUNDING ELECTRODE.

3.2 PIPING JOINT CONSTRUCTION

A. THREADED JOINTS: THREAD PIPE WITH TAPERED PIPE THREADS COMPLYING WITH ASME B1.20.1.

B. WELDED JOINTS: CONSTRUCT JOINTS ACCORDING TO AWS D10.12M/D10.12, USING QUALIFIED PROCESSES AND WELDING OPERATORS.

C. JOINTS IN STEEL PIPING WITH PROTECTIVE COATING: APPLY JOINT COVER KITS TO PIPE AFTER JOINING TO COVER, SEAL, AND PROTECT JOINTS.

D. FLANGED JOINTS: INSTALL GASKET MATERIAL, SIZE, TYPE, AND THICKNESS APPROPRIATE FOR NATURAL-GAS SERVICE. INSTALL GASKET CONCENTRICALLY POSITIONED.

3.3 VALVE INSTALLATION

A. INSTALL MANUAL GAS SHUTOFF VALVE FOR EACH GAS APPLIANCE AHEAD OF CORRUGATED STAINLESS-STEEL TUBING, ALUMINUM, OR COPPER CONNECTOR.

B. INSTALL REGULATORS AND OVERPRESSURE PROTECTION DEVICES WITH MAINTENANCE ACCESS SPACE ADEQUATE FOR SERVICING AND TESTING.

3.4 INDOOR PIPING SCHEDULE FOR SYSTEM PRESSURES MORE THAN 7" W.C. AND LESS THAN 5 PSIG.

A. ABOVEGROUND, BRANCH PIPING NPS 1 AND SMALLER SHALL BE THE FOLLOWING:

1. CORRUGATED STAINLESS-STEEL TUBING WITH MECHANICAL FITTINGS HAVING SOCKET OR THREADED ENDS TO MATCH ADJACENT PIPING.
2. STEEL PIPE WITH MALLEABLE-IRON FITTINGS AND THREADED JOINTS.

B. ABOVEGROUND, DISTRIBUTION PIPING SHALL BE THE FOLLOWING:

1. STEEL PIPE WITH MALLEABLE-IRON FITTINGS AND THREADED JOINTS.

C. UNDERGROUND, BELOW BUILDING, SHALL BE[ONE OF] THE FOLLOWING:

1. STEEL PIPE WITH MALLEABLE-IRON FITTINGS AND THREADED JOINTS.
2. STEEL PIPE WITH WROUGHT-STEEL FITTINGS AND WELDED JOINTS.

D. CONTAINMENT CONDUIT: STEEL WITH WROUGHT-STEEL FITTINGS AND WELDED JOINTS. COAT PIPE AND FITTINGS WITH PROTECTIVE COATING FOR STEEL PIPING.

E. CONTAINMENT CONDUIT VENT PIPING: STEEL PIPE WITH MALLEABLE-IRON FITTINGS AND THREADED OR WROUGHT-STEEL FITTINGS WITH WELDED JOINTS. COAT UNDERGROUND PIPE AND FITTINGS WITH PROTECTIVE COATING FOR STEEL PIPING.

END OF SECTION

Consultant:
annex ENGINEERING GROUP
589 w nationwide blvd ste b
columbus, ohio 43215
tel: 614.481.2292
fax: 614.487.8777

BID SET

NOT FOR CONSTRUCTION

COPYRIGHT 2026
ALL DRAWINGS AND SPECIFICATIONS SHALL REMAIN THE PROPERTY OF ANNEX ENGINEERING GROUP AND MAY NOT BE USED, DUPLICATED, OR ALTERED WITHOUT THE WRITTEN CONSENT OF THE ENGINEER.

ECP PARTNERS
ECP PARTNERS, LLC
4362 NORTHLAKE BLVD, SUITE 213
PALM BEACH GARDENS, FL 33410

CMG HIGHLAND CITY SHELL, FL
TBD US 98
LAKELAND, FL 33812

Issue Record:

02.25.2026	PERMIT SET
02.25.2026	BID SET

Revisions:

Drawn: AB
Checked: SS

Project No.
EPL002

Contents:
SPECIFICATIONS
PLUMBING SHELL

P730

ABBREVIATIONS

(A)	EXISTING TO BE ABANDONED	INCD	INCANDESCENT
(D)	EXISTING TO BE DEMOLISHED	KVA	KILOVOLT AMPERE
(E)	EXISTING TO REMAIN	KW	KILOWATT
(F)	FUTURE	LTG	LIGHTING OR LIGHT
(R)	EXISTING TO BE RELOCATED	LRA	LOCKED ROTOR AMPS
A	AMPERE	MCA	MAXIMUM CURRENT AMPACITY
AC	ALTERNATING CURRENT OR AIR CONDITIONER	MCB	MAIN CIRCUIT BREAKER
AFF	ABOVE FINISHED FLOOR	MCC	MOTOR CONTROL CENTER
AFG	ABOVE FINISHED GRADE	MDP	MAIN DISTRIBUTION PANEL
AIC	AMPS INTERRUPTING CAPACITY	MLO	MAIN LUGS ONLY
ANNC	ANNUNCIATOR	MOCP	MAXIMUM OVERCURRENT PROTECTION
AWG	AMERICAN WIRE GAUGE	MSB	MAIN SWITCHBOARD
BPS	BOLTED PRESSURE SWITCH	MH	METAL HALIDE
C	CONDUIT	MTS	MANUAL TRANSFER SWITCH
CB	CIRCUIT BREAKER	NAC	NOTIFICATION APPLIANCE CIRCUIT
CCTV	CLOSED CIRCUIT TELEVISION	NC	NORMALLY CLOSED
CKT	CIRCUIT	NO	NORMALLY OPEN
CM	CONSTRUCTION MANAGER	NF	NON-FUSED
DC	DIRECT CURRENT	OCC	OCCUPANCY
DP	DISTRIBUTION PANELBOARD	PA	PUBLIC ADDRESS
DTT	DOUBLE TWIN TUBE	PB	PULL BOX OR PUSH BUTTON
EB	ELECTRONIC BALLAST	PVC	POLYVINYL CHLORIDE (PLASTIC PIPE)
EC	ELECTRICAL CONTRACTOR	PWR	POWER
EM	EMERGENCY	RECPT	RECEPTACLE
EMT	ELECTRICAL METAL TUBING	STP	SHIELDED, TWISTED PAIR
EWC	ELECTRIC WATER COOLER	TC	TIME CLOCK
FA	FIRE ALARM	TRT	TRIPLE TUBE
FLA	FULL LOAD AMPS	TYP	TYPICAL
G	GROUND	UNO	UNLESS NOTED OTHERWISE
GC	GENERAL TRADES CONTRACTOR	UTP	UNSHIELDED, TWISTED PAIR
GFCI	GROUND FAULT CIRCUIT INTERRUPTER	V	VOLT
GEN	GENERATOR	W	WATT
HOA	HAND-OFF-AUTOMATIC	WAP	WIRELESS ACCESS POINT
HP	HORSEPOWER	WH	WATTHOUR
HPC	HIGH PRESSURE CONTACT SWITCH	WP	WEATHERPROOF, NEMA 3R UNO
HZ	HERTZ	XFMR	TRANSFORMER
IG	ISOLATED GROUND	Z	IMPEDANCE
IMC	INTERMEDIATE METAL CONDUIT	Φ	PHASE

LIGHTING LEGEND

TAG	DESCRIPTION
	WALL SCONCE
	EXIT/EMERGENCY LIGHT W/ BATTERY PACK AND DUAL HEADS
	EXIT/EMERGENCY LIGHT WITH BATTERY PACK
	EXIT LIGHT (SURFACE MOUNTED)
	EXIT LIGHT (CEILING MOUNTED)
	REMOTE EMERGENCY HEADS
	EMERGENCY BATTERY PACK AND DUAL HEADS

ELECTRICAL LEGEND

DETAIL	DESCRIPTION
WP GFI	DUPLEX RECEPTACLE - WITH WEATHERPROOF COVER & GFCI
A-1	BRANCH CIRCUIT HOME-RUN WITH CIRCUIT NUMBER
J	JUNCTION BOX
	DISCONNECT - NON FUSED
M	UTILITY METER
	ELECTRICAL PANEL

LUMINAIRE SCHEDULE SHELL

TAG	DESCRIPTION	MANUFACTURER	MODEL	LAMP	FINISH/ COLOR	COMMENTS	VOLTS	INPUT WATTS
E2	LED EMERGENCY REMOTE HEAD	EXITRONIX	MLED1-B-WP	--	BLACK	--	120	1
E4	COMBINATION LED EXIT SIGN	EXITRONIX	SIGN: CLED-U-WH REMOTE HEAD: MLED-W-G2	--	WHITE	PROVIDE WITH 90 MINUTE BATTERY BACKUP	120	2
S1	SITE LIGHTING	BEACON	VP-1-160L-135-4K7-4W-UNV-A5-DBT	LED	DARK BRONZE	MOUNT AT 25'-0" TO ROUND ALUMINUM POLE (EQUAL TO GENERAL STRUCTURES CPA-4-6018-25-EMB-D1-DB). COORDINATE WITH POLE BASE DETAIL SHEET E400 AND CIVIL DIRECT BURIAL POLE DETAIL.	120	132.2
S2	SITE LIGHTING	BEACON	VP-1-160L-75-4K7-3-UNV-A5-DBT-BC	LED	DARK BRONZE	MOUNT AT 25'-0" TO ROUND ALUMINUM POLE (EQUAL TO GENERAL STRUCTURES CPA-4-6018-25-EMB-D1-DB). COORDINATE WITH POLE BASE DETAIL SHEET E400 AND CIVIL DIRECT BURIAL POLE DETAIL.	120	72.1
X3	ACCENT WALL PACK	PERFORMANCE IN LIGHTING, INC.	ALU ROUND SIDE 4	LED	BLACK	PROVIDE WITH WALL MOUNTING KIT. REFER TO ARCH FOR FURTHER INFORMATION.	120	2.1
X6.1	WALL PACK W / 90 MIN BATTERY BACKUP	RAB LIGHTING	WPLEDS/E	LED	BRONZE	SURFACE MOUNT TO RECESSED JUNCTION BOX. FIELD VERIFY FIXTURE IS FACTORY SET TO 10W, 3000K, AND PHOTOCELL OFF.	120	12.1
X6.2	PATIO WALL PACK	RAB LIGHTING	WPLEDS	LED	BRONZE	PROVIDE WITH WALL MOUNTING KIT. REFER TO ARCH FOR FURTHER INFORMATION.	120	12.1
X9	LED LINEAR FIXTURE	PARADIGM LED	PL-AMC-2415 W / OPAL LENS AND END CAPS PL-FLEXSR590-WW-WP-3000K	INTEGRATED LED	WHITE	FURNISHED W/ REMOTE-MOUNTED NEMA 3R DIMMABLE PL-PS-M100-DIM-24 LED DRIVER. FIELD CUTTABLE; SEE PLAN FOR LENGTHS.	120	4.5W/FT

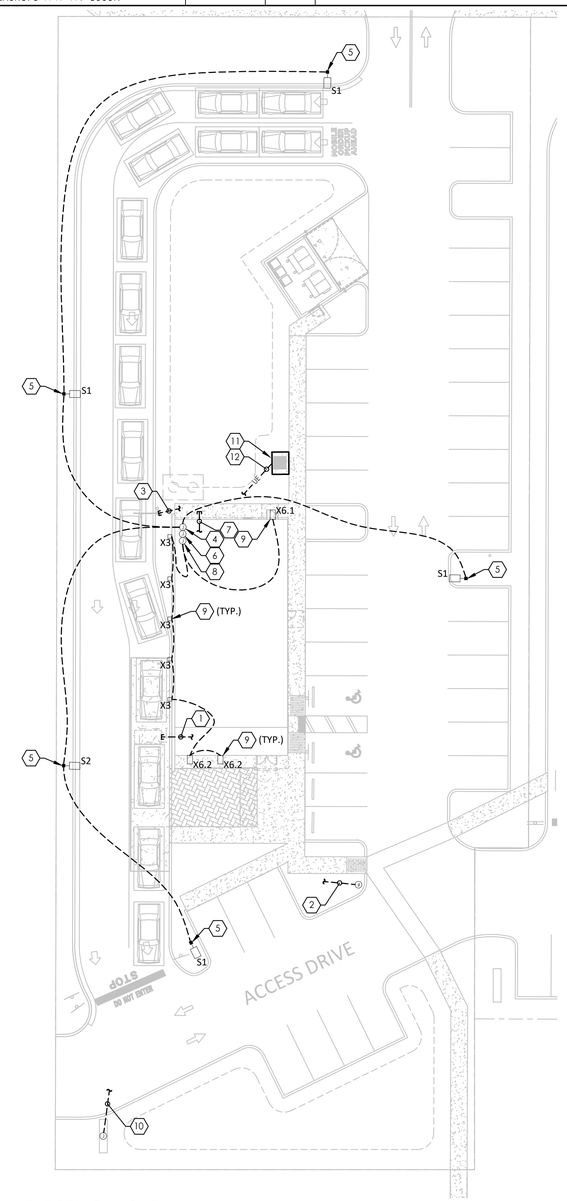

1 SITE PLAN - ELECTRICAL SHELL
3/64" = 1'-0"

GENERAL NOTES:

A. ALL WORK TO COMPLY TO ALL STATE, LOCAL, NEC, & NFPA CODES.

B. ELECTRICAL CONTRACTOR TO VISIT THE SITE PRIOR TO SUBMITTING A BID & INCLUDE IN THEIR BID ANY ITEMS NECESSARY FOR A COMPLETE & OPERATIONAL SYSTEM.

C. DRAWINGS ARE SCHEMATIC IN NATURE. ELECTRICAL CONTRACTOR IS TO ADD ANY ITEMS THAT ARE REQUIRED FOR A COMPLETE & OPERATIONAL SYSTEM IN THEIR PROPOSAL.

D. ELECTRICAL CONTRACTOR IS TO COORDINATE THEIR INSTALLATION WITH THE OTHER TRADES. IF A CONFLICT OCCURS AND IT IS DUE TO THE ELECTRICAL CONTRACTOR'S LACK OF COORDINATION, ALL WORK INVOLVED IN RESOLVING THE CONFLICT WILL BE AT THE EXPENSE OF THE ELECTRICAL CONTRACTOR.

E. ELECTRICAL CONTRACTOR TO PAY ALL FEES AND PERMITS.

F. SEE ARCHITECTURAL DRAWINGS FOR PATIO CONDUIT DETAIL. COORDINATE PRIOR TO ROUGH-IN.

G. ANY MC CABLE MUST BE RUN IN WALL. ALL CONDUIT OUTSIDE OF WALL TO BE EMT.

H. CANOPY LIGHTING CONDUIT SHALL BE RUN IN MC CABLE.

I. NO LIGHTING SUBSTITUTIONS.

J. REFER TO CIVIL SITE AND UTILITY DRAWINGS FOR FINAL LOCATIONS AND COORDINATION. CONTACT ENGINEER OF RECORD AND ARCHITECT OF RECORD IMMEDIATELY IF ANY DISCREPANCIES ARISE.

CONDUITS AND WIRING NOTES:

ALL WIRING RUN THROUGH TENANT'S EXPOSED CEILING SHALL BE IN EMT OR IMC AND RUN TIGHT TO THE DECK OR EITHER PARALLEL OR PERPENDICULAR TO MAIN ENTRY STOREFRONT. THERE SHALL BE NO DIAGONAL RUNS AND ALL CONDUITS SHALL BE IN STRAIGHT LINES.

CODED NOTES: ⟨#⟩

1. VEHICLE LOOP. REFER TO SITE CONDUIT DETAIL ON SHEET E400 FOR FURTHER INFORMATION. REFER TO CIVIL AND ARCHITECTURAL PLANS FOR CONTINUATION.
2. ANNOUNCE SIGN. REFER TO SITE CONDUIT DETAIL ON SHEET E400 FOR FURTHER INFORMATION. COORDINATE EXACT LOCATION AND ROUTING IN FIELD AND WITH CIVIL SITE PLAN DRAWINGS PRIOR TO BID.
3. CLEARANCE BAR. REFER TO SITE CONDUIT DETAIL ON SHEET E400 FOR FURTHER INFORMATION. COORDINATE EXACT LOCATION AND ROUTING IN FIELD AND WITH CIVIL SITE PLAN DRAWINGS PRIOR TO BID.
4. LINE VOLTAGE JB. REFER TO SITE CONDUIT DETAIL ON SHEET E400 FOR FURTHER INFORMATION. COORDINATE EXACT LOCATION, MOUNTING HEIGHT, AND ROUTING IN FIELD AND WITH TENANT FITOUT DRAWINGS PRIOR TO BID.
5. PROVIDE PARKING AREA LIGHT PER SCHEDULE. REFER TO POLE DETAIL ON SHEET E400 FOR FURTHER INFORMATION. PROVIDE CONDUIT TO LINE VOLTAGE JB. COORDINATE FINAL LOCATIONS WITH CIVIL SITE PLAN AND POINT-BY-POINT PLAN PRIOR TO CONSTRUCTION.
6. VEHICLE DETECTOR JB. REFER TO SITE CONDUIT DETAIL ON SHEET E400 FOR FURTHER INFORMATION. COORDINATE EXACT LOCATION, MOUNTING HEIGHT, AND ROUTING IN FIELD AND WITH TENANT FITOUT DRAWINGS PRIOR TO BID.
7. PROVIDE (2) SPARE 1" EMPTY CONDUIT WITH PULLSTRING THROUGH FOUNDATION WALL OUT REAR OF BUILDING, CAPPED AND TERMINATED ABOVE CEILING. RUN TIGHT TO STRUCTURE. COORDINATE EXACT LOCATION FOR STUB UP WITH TENANT.
8. PATIO LIGHTING LINE VOLTAGE JUNCTION BOX FOR FUTURE CONNECTION WITHIN BUILDING BY TENANT. COORDINATE EXACT LOCATION, MOUNTING HEIGHT, AND ROUTING IN FIELD AND WITH TENANT FITOUT DRAWINGS PRIOR TO BID.
9. PROVIDE WALL MOUNTED LIGHT PER SCHEDULE. REFER TO ARCHITECTURAL PLANS AND ELEVATIONS FOR EXACT LOCATION AND MOUNTING HEIGHT.
10. MONUMENT SIGN. REFER TO SITE CONDUIT DETAIL ON SHEET E400 FOR FURTHER INFORMATION.
11. UTILITY COMPANY PROVIDED PAD MOUNTED TRANSFORMER. COORDINATE SPECIFICATIONS AND LOCATION WITH LOCAL UTILITY COMPANY PRIOR TO BID.
12. UNDERGROUND SECONDARY ELECTRIC. SEE ONE LINE DIAGRAM & FLOOR PLAN FOR FURTHER INFORMATION.

Consultant:
annex ENGINEERING GROUP
589 w nationwide blvd ste b
columbus, ohio 43215
tel: 614.481.2292
fax: 614.487.8777

BID SET

NOT FOR CONSTRUCTION

COPYRIGHT 2026
ALL DRAWINGS AND SPECIFICATIONS SHALL REMAIN THE PROPERTY OF ANNEX ENGINEERING GROUP AND MAY NOT BE USED, DUPLICATED, OR ALTERED WITHOUT THE WRITTEN CONSENT OF THE ENGINEER.

ECP PARTNERS

ECP PARTNERS, LLC
4362 NORTHLAKE BLVD, SUITE 213
PALM BEACH GARDENS, FL 33410

CMG HIGHLAND CITY SHELL, FL
TBD US 98
LAKELAND, FL 33812

Issue Record:

02.25.2026	PERMIT SET
02.25.2026	BID SET

Revisions:

Drawn: AB
Checked: SS

Project No.
EPL002

Contents:
SITE PLAN
ELECTRICAL SHELL

E100

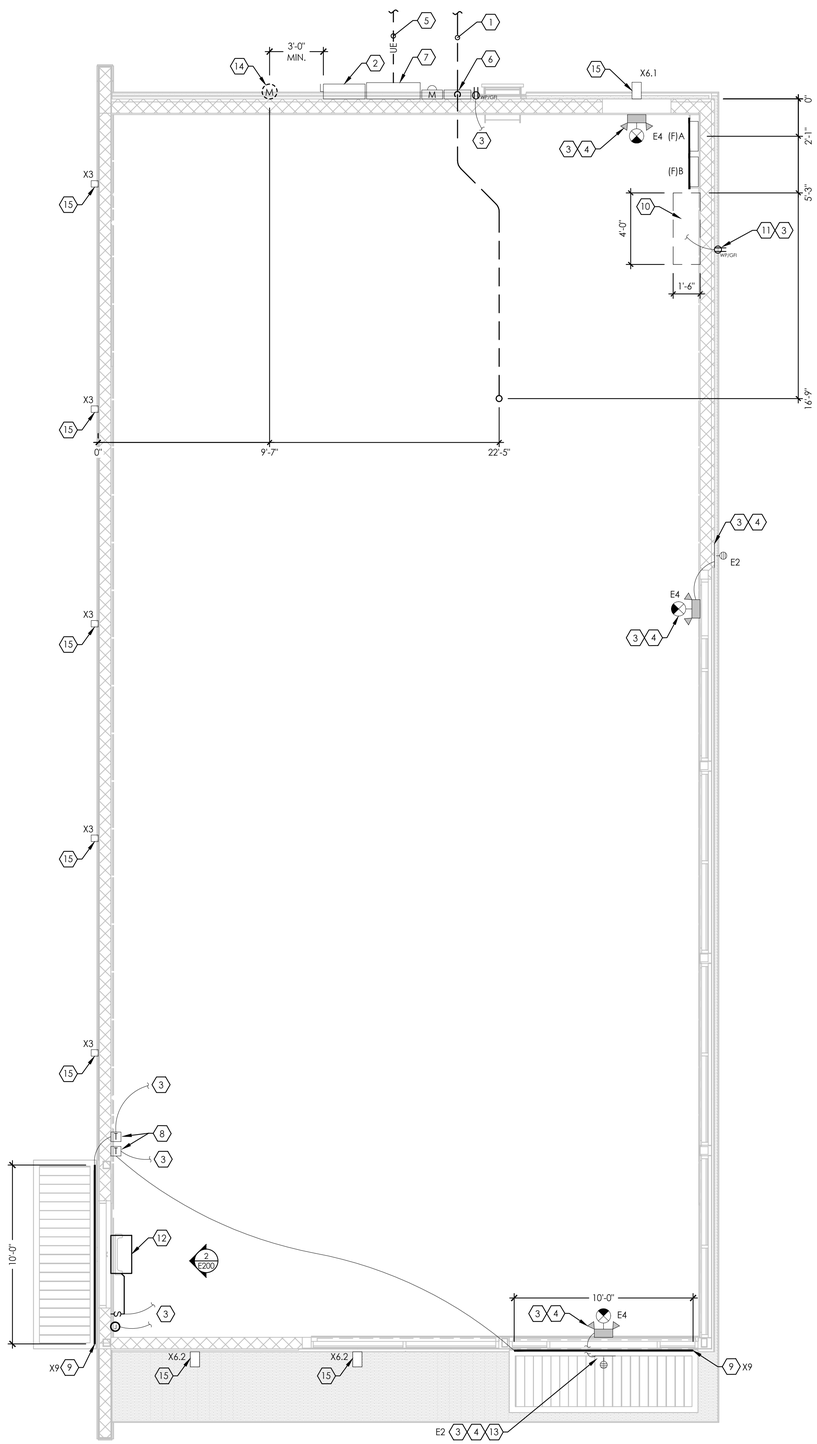

1 FLOOR PLAN - ELECTRICAL SHELL
1/4" = 1'-0"

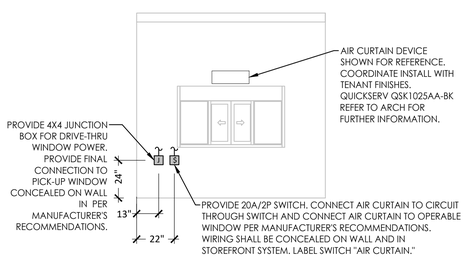

2 DRIVE THRU WINDOW ELEVATION DETAIL
N.T.S.

CODED NOTES: (#)

1. PROVIDE 12 PAIR TELEPHONE CABLE IN 2" CONDUIT FROM TELEPHONE DEMARC LOCATION TO STUB INTO BUILDING. PROVIDE 2" EMPTY CONDUIT WITH PULLSTRING FROM ISP DEMARC LOCATION TO STUB INTO BUILDING. COORDINATE EXACT LOCATION WITH TENANT. CONDUITS SHALL BE STUBBED UP 12" AND CAPPED IN SPACE. SEE CIVIL PLAN FOR CONTINUATION.
2. PROVIDE SERVICE ENTRANCE DISC SWITCH: 600A/3P NEMA 3R, 208Y/120V-3 PHASE, 4 WIRE. SEE ONE LINE DIAGRAM. COORDINATE EXACT LOCATION WITH TENANT PLANS PRIOR TO ROUGH IN.
3. PROVIDE 20A FEEDER FROM DEVICE TO FUTURE PANELBOARD. COIL WIRE ABOVE CEILING AND LABEL FOR CONNECTION TO PANELBOARD BY TENANT'S CONTRACTOR.
4. PROVIDE EXIT/EMERGENCY LIGHTING AND PULL CIRCUIT TO 20A-1P BREAKER WITH LOCKING DEVICE.
5. UNDERGROUND SECONDARY ELECTRIC. SEE ONE LINE DIAGRAM & SITE ELECTRIC PLAN FOR FURTHER INFORMATION. SEE ONE LINE DIAGRAM & SITE ELECTRIC PLAN FOR FURTHER INFORMATION. REFER TO DUCT BANK DETAILS ON SHEET E400 AND CIVIL UTILITY PLAN FOR CONTINUATION AND FURTHER INFORMATION.
6. TELEPHONE CABINET PROVIDED BY LOCAL PHONE COMPANY. COORDINATE LOCATION PRIOR TO INSTALLATION.
7. METER SOCKET/CT CABINET (IF REQUIRED - EC SHALL COORDINATE WITH LOCAL POWER CO.) LOCATION. SEE ONE LINE DIAGRAM FOR COORDINATION.
8. X9 LIGHT FIXTURE LED DRIVER. MOUNT HIGH ON WALL NEAR STRUCTURE. COORDINATE QUANTITY OF DRIVERS WITH DIMENSIONS OF FIXTURE.
9. PROVIDE LIGHT FIXTURES AS SHOWN AND PROVIDE CONDUIT AND WIRING BACK TO PANEL LOCATION AS SHOWN. RUN CONDUIT AND WIRING CONCEALED IN WALL CAVITY.REFER TO ARCHITECTURAL PLANS FOR MOUNTING HEIGHT AND INSTALLATION COORDINATION.
10. WATER SERVICE ENTRANCE LEAVE-OUT. COORDINATE WITH PLUMBING CONTRACTOR.
11. PROVIDE WP/GFCI NEMA 5-20R RECEPTACLE FOR IRRIGATION CONTROLLER. CONTROLLER BY LANDSCAPE ARCHITECT AND LANDSCAPING CONTRACTOR. COORDINATE LOCATION AND ELEVATION WITH LANDSCAPE ARCHITECT AND PLUMBING CONTRACTOR. FINAL CONNECTIONS BY LANDSCAPING CONTRACTOR.
12. AIR CURTAIN DEVICE FURNISHED BY WINDOW SUPPLIER. REFER TO ARCHITECTURAL SPECIFICATIONS FOR REGIONAL REQUIREMENTS. PROVIDE SWITCH AS SHOWN. REFER TO ELEVATION FOR FURTHER INFORMATION. PROVIDE 40A/2P FEEDER FROM DEVICE TO FUTURE PANELBOARD. COIL WIRE ABOVE CEILING AND LABEL FOR CONNECTION TO PANELBOARD BY TENANT'S CONTRACTOR.
13. MOUNT TO CANOPY. COORDINATE WITH ARCHITECTURAL DRAWINGS AND ELEVATIONS PRIOR TO BID.
14. GAS METER SHOWN FOR REFERENCE PURPOSES ONLY. MAINTAIN ALL CODE, AHJ, AND UTILITY PROVIDER REQUIRED CLEARANCES. COORDINATE WITH PLUMBING CONTRACTOR PRIOR TO BID.
15. WALL PACK. INSTALL PER MANUFACTURER'S RECOMMENDATIONS. REFER TO LUMINAIRE SCHEDULE ON E100 FOR FURTHER INFORMATION. REFER TO ARCHITECTURAL PLANS AND ELEVATIONS FOR EXACT LOCATION AND MOUNTING HEIGHT. REFER TO SHEET E100 FOR CONTINUATION AND FURTHER INFORMATION.

Consultant:
annex ENGINEERING GROUP
589 w nationwide blvd ste b
columbus, ohio 43215
tel: 614.481.2292
fax: 614.487.8777

BID SET

NOT FOR CONSTRUCTION

COPYRIGHT 2026
ALL DRAWINGS AND SPECIFICATIONS SHALL REMAIN THE PROPERTY OF ANNEX ENGINEERING GROUP AND MAY NOT BE USED, DUPLICATED, OR ALTERED WITHOUT THE WRITTEN CONSENT OF THE ENGINEER.

ECP PARTNERS
ECP PARTNERS, LLC
4362 NORTHLAKE BLVD, SUITE 213
PALM BEACH GARDENS, FL 33410

CMG HIGHLAND CITY SHELL, FL
TBD US 98
LAKELAND, FL 33812

Issue Record:

02.25.2026	PERMIT SET
02.25.2026	BID SET

Revisions:

Drawn: AB
Checked: SS

Project No.
EPL002

Contents:
POWER & LIGHTING PLAN
ELECTRICAL SHELL

E200

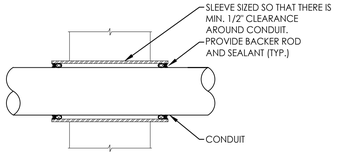

NOTES:
1. COORDINATE EXACT LOCATIONS, ELEVATIONS, AND QUANTITIES IN FIELD AND WITH STRUCTURAL DRAWINGS PRIOR TO BID.

TAG	DESCRIPTION	RESPONSIBILITY: DEVICE OR CONDUIT	RESPONSIBILITY: CONNECTION OR CONDUCTORS
1	VEHICLE DETECTOR LOOP - 6'x4' WITH 4 TURNS (EMX PR-46-XX). VERIFY LENGTH OF LEAD-IN WIRE PRIOR TO ORDERING TO ALLOW WIRE TO REACH VEHICLE DETECTOR WITHOUT SPLICING. SEE SITE PLAN FOR LOCATIONS.	TENANT	TENANT
2	1" CONDUIT FROM VEHICLE DETECTOR LOOP LOCATION TO LOW VOLTAGE JB.	GC	TENANT
3	1" CONDUIT FROM MARKETING BOARD LOCATION TO LINE VOLTAGE JB. SEE SITE PLAN FOR LOCATION.	GC	TENANT
4	1" CONDUIT FROM CLEARANCE BAR LOCATION TO LINE VOLTAGE JB. SEE SITE PLAN FOR LOCATION.	GC	N/A
5	1" CONDUIT FROM SITE DIRECTIONAL SIGNAGE AND/OR MONUMENT SIGN LOCATION(S) TO LINE VOLTAGE JB. SEE SITE PLAN FOR LOCATIONS AND NUMBER OF ROUGH-IN LOCATIONS.	GC	TENANT
6	1" CONDUIT FROM SITE LIGHTING FIXTURE(S) TO LINE VOLTAGE JB. SITE LIGHTING FIXTURES CAN BE DAISY-CHAINED.	GC	GC
7	LINE VOLTAGE JB. MINIMUM 6"x6"x4" JB ON INTERIOR WALL OF BUILDING AT 11'-0" AFF. SEE SITE PLAN FOR LOCATION.	GC	TENANT
8	LOW VOLTAGE JB. MINIMUM 6"x6"x4" JB ON INTERIOR WALL OF BUILDING AT 11'-0" AFF. SEE SITE PLAN FOR LOCATION.	GC	TENANT
9	1" SPARE CONDUIT FROM LOW VOLTAGE JB TO LANDSCAPING AREA. SEAL CONDUIT FOR FUTURE USE.	GC	TENANT
10	1" SPARE CONDUIT FROM LINE VOLTAGE JB TO LANDSCAPING AREA. SEAL CONDUIT FOR FUTURE USE.	GC	TENANT

GENERAL NOTES
A. WORK AND MATERIALS SHALL BE COMPLIANT WITH THE NEC AND REQUIREMENTS OF THE AHJ.
B. CONDUCTORS AND CONNECTIONS BELOW GRADE, EVEN WHERE WITHIN CONDUITS OR ENCLOSURES, SHALL BE SUITABLE FOR WET LOCATIONS.
C. PROVIDE PULL STRING IN EMPTY CONDUITS.
D. SEAL ENDS OF CONDUITS STUBBED UP ABOVE GRADE TO PROTECT FROM THE ELEMENTS.

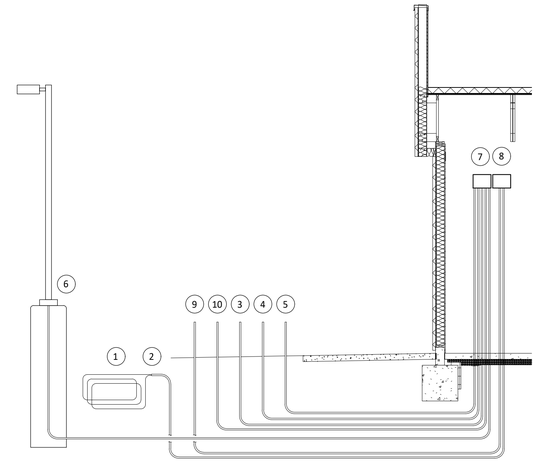

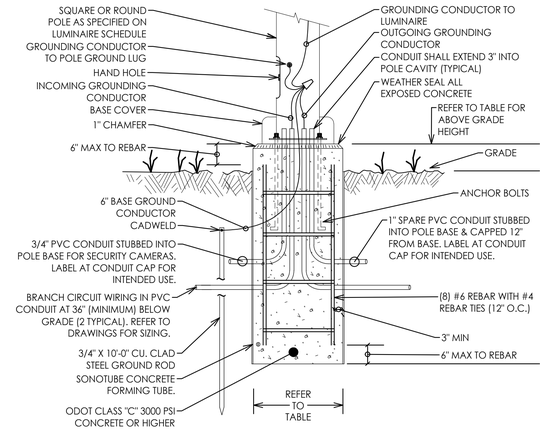

LUMINAIRE BASE DIMENSIONS				
POLE HEIGHT	LOCATION	BASE DEPTH	BASE DIA	ABOVE GRADE HEIGHT
≤10'-0"	PARKING	48"	18"	30"
15'-0"	PARKING	48"	24"	30"
20'-0"	PARKING	48"	24"	30"
25'-0"	PARKING	60"	24"	30"
30'-0"	PARKING	72"	24"	30"

NOTES:
1. DETAIL ASSUMES 2000 PSF AVERAGE LATERAL SOIL BEARING CAPACITY IN UNDISTURBED (OR WELL COMPACTED) EARTH.
2. DESIGN ASSUMES SINGLE OR DOUBLE LUMINAIRE NOT EXCEEDING POLE MANUFACTURE'S SPECIFICATIONS FOR WEIGHT, MAXIMUM EPA (EFFECTIVE PROJECTED AREA), AND 100 MPH DESIGN WIND SPEED.
3. CONSULT STRUCTURAL ENGINEER IF ACTUAL SITE CONDITIONS (OR LUMINAIRE CONFIGURATION) VARIES FROM DESIGN ASSUMPTIONS.
4. USE GRADE 60 REINFORCING STEEL. USE EPOXY COATED STEEL IN PARKING LOT APPLICATIONS OR IN AREAS WHERE DE-ICING SALT IS USED. MAINTAIN 3" (MINIMUM).
5. INSTALL POLE IN STRICT ACCORDANCE WITH POLE MANUFACTURER'S RECOMMENDATIONS. VIBRATION DAMPENERS SHALL BE PROVIDED.
6. ANCHOR BOLTS SHALL NOT BE CUT OFF FOR ANY REASON. EXTENSION COUPLERS ARE NOT PERMITTED.
7. INSTALL FOUNDATION A MINIMUM OF 2'-6" FROM BACK OF CURB IN PARKING LOTS. INSTALL FOUNDATION A MINIMUM OF 36" FROM STORM OR SANITARY PIPING.
8. AT LOCATIONS WHERE THE EXISTING SLOPE IS 6:1 OR GREATER, THE BURIED DEPTH OF FOUNDATION SHALL APPLY TO THE LOW SIDE OF SLOPE.

7 CONDUIT THROUGH FOUNDATION DETAIL
N.T.S.

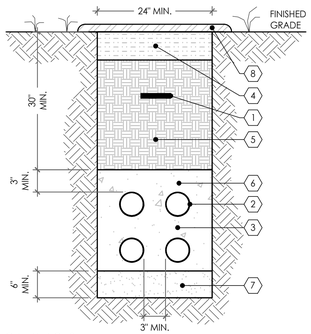

KEYED NOTES:
1. 3" WIDE DETECTABLE TAPE. INSTALL 12" BELOW FINISHED GRADE. (ONE PER 12" OF TRENCH WIDTH)
2. ELECTRICAL DUCTS SHALL BE 4" (UNLESS OTHERWISE NOTED) SCHEDULE 40 PVC.
3. INSTALL 4" SEPARATION BETWEEN DUCTS AND SIDES OF TRENCH.
4. SUB-BASE MATERIAL 6" DEEP AND COMPACTED TO 90%.
5. BACKFILL WITH EXCAVATED OR BORROWED MATERIAL. MATERIAL SHALL BE FREE OF ROCKS 2" DIAMETER AND LARGER. COMPACT TO 90% IN MAX 8" LIFT OF LOOSE SOIL.
6. CONCRETE ENCASEMENT.
7. ALL PIPING SHALL BE LAID ON A BED OF SAND 6" DEEP, WELL TAMPED INTO PLACE AND PROPERLY GRADED TO PERMIT THE PIPE TO HAVE AN EVEN BEARING THROUGHOUT ITS ENTIRE LENGTH.
8. PAVEMENT BY OTHERS.

GENERAL NOTES:
A. TYPICAL FOR ALL CONDUITS/DUCT BANKS, REGARDLESS OF QUANTITY.
B. FOR SERVICE CONDUIT UNDER TRAFFIC-BEARING SURFACES. REFER TO CIVIL UTILITY PLAN FOR EXTENT OF SCOPE AND CONTINUATION.
C. CONCRETE ENCASE CONDUIT(S) UNDER ROADWAYS, DRIVEWAYS, AND PARKING LOTS. MINIMUM OF 3" CONCRETE ENCASEMENTS.
D. WHENEVER POSSIBLE, DUCT ARRANGEMENTS SHALL BE RESTRICTED TO EITHER A TWO (2) CONDUIT WIDTH OR A CONDUIT DEPTH TO ALLOW SIDE EXPOSURE OF ALL DUCTS. WHEN NOT POSSIBLE, ADDITIONAL INNER DUCTS WITH NO SIDE EXPOSURE SHALL BE PROVIDED AND SHALL NOT BE USED FOR POWER WIRING. EXCEPTION: A DUCT WITH NO SIDE EXPOSURE MAY BE USED FOR LOW VOLTAGE SYSTEM WIRING AND/OR FIBER OPTIC CABLING.
E. MINIMUM SEPARATION BETWEEN CONDUITS SHALL BE 3". MINIMUM SPACING BETWEEN POWER AND COMMUNICATION CONDUITS SHALL BE 12". REFER TO DRAWINGS FOR EXACT CONDUIT REQUIREMENTS. EXACT CONFIGURATION AND DEPTH SHALL BE ADJUSTED AFTER COORDINATION WITH OTHER TRADES ON SITE. REFER TO COORDINATION NOTES ON THE DRAWINGS.

5 DUCT BANK UNDER NEW PAVEMENT DETAIL
N.T.S.

6 SITE CONDUIT DETAIL
N.T.S.

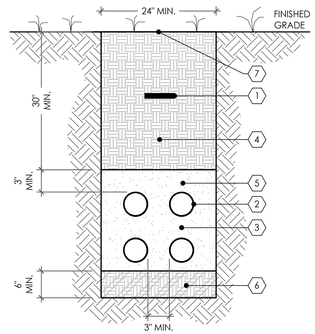

KEYED NOTES:
1. 3" WIDE DETECTABLE TAPE. INSTALL 12" BELOW FINISHED GRADE. (ONE PER 12" OF TRENCH WIDTH)
2. ELECTRICAL DUCTS SHALL BE 4" (UNLESS OTHERWISE NOTED) SCHEDULE 40 PVC.
3. INSTALL 4" SEPARATION BETWEEN DUCTS AND SIDES OF TRENCH. ALIGN DUCTS ON CHAIRS.
4. BACKFILL WITH EXCAVATED OR BORROWED MATERIAL. MATERIAL SHALL BE FREE OF ROCKS 2" DIAMETER AND LARGER. COMPACT TO 90% IN MAX 8" LIFT OF LOOSE SOIL.
5. SAND WELL TAMPED INTO PLACE.
6. ALL PIPING SHALL BE LAID ON A BED OF CLEAN FILL 6" DEEP WELL TAMPED INTO PLACE AND PROPERLY GRADED TO PERMIT THE PIPE TO HAVE AN EVEN BEARING THROUGHOUT ITS ENTIRE LENGTH.
7. TOPSOIL/SEEDING TO MATCH EXISTING.

GENERAL NOTES:
A. TYPICAL FOR ALL CONDUITS/DUCT BANKS, REGARDLESS OF QUANTITY.
B. BRANCH CIRCUITS SHALL BE LIMITED TO 40A/3 PHASE FOR THIS DETAIL.
C. WHENEVER POSSIBLE, DUCT ARRANGEMENTS SHALL BE RESTRICTED TO EITHER A TWO (2) CONDUIT WIDTH OR A CONDUIT DEPTH TO ALLOW SIDE EXPOSURE OF ALL DUCTS. WHEN NOT POSSIBLE, ADDITIONAL INNER DUCTS WITH NO SIDE EXPOSURE SHALL BE PROVIDED AND SHALL NOT BE USED FOR POWER WIRING. EXCEPTION: A DUCT WITH NO SIDE EXPOSURE MAY BE USED FOR LOW VOLTAGE SYSTEM WIRING AND/OR FIBER OPTIC CABLING.
D. MINIMUM SEPARATION BETWEEN CONDUITS SHALL BE 3". MINIMUM SPACING BETWEEN POWER AND COMMUNICATION CONDUITS SHALL BE 12". REFER TO DRAWINGS FOR EXACT CONDUIT REQUIREMENTS. EXACT CONFIGURATION AND DEPTH SHALL BE ADJUSTED AFTER COORDINATION WITH OTHER TRADES ON SITE. REFER TO COORDINATION NOTES ON THE DRAWINGS.

4 DUCT BANK UNDER LAWN DETAIL
N.T.S.

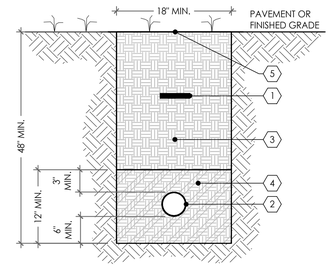

KEYED NOTES:
1. 3" WIDE DETECTABLE TAPE. INSTALL 12" BELOW FINISHED GRADE. (ONE PER 12" OF TRENCH WIDTH)
2. UNDERGROUND CONDUIT.
3. BACKFILL WITH EXCAVATED OR BORROWED MATERIAL. MATERIAL SHALL BE FREE OF ROCKS 2" DIAMETER AND LARGER. COMPACT TO 90% IN MAX 8" LIFT OF LOOSE SOIL.
4. CLEAN FILL WELL TAMPED INTO PLACE WHEN BENEATH LAWN OR ENCASED IN CONCRETE WHEN BENEATH PAVEMENT. REFER TO GENERAL NOTES BELOW.
5. TOPSOIL/SEEDING TO MATCH EXISTING.

GENERAL NOTES:
A. CONTRACTOR SHALL LOCATE UNDERGROUND CONDUIT AT A MINIMUM OF 10'-0" FROM NEAREST TREE, OR IF NOT PRACTICAL, AS DIRECTED IN FIELD BY THE LANDSCAPE ARCHITECT.
B. ALL UNDERGROUND ELECTRICAL CONDUIT SHALL HAVE A DETECTABLE WARNING TAPE INSTALLED 12" BELOW GRADE - DIRECTLY ABOVE THE CONDUIT. WARNING TAPE SHALL BE "TERRA TAPE", 3" WIDE, LABELED WITH "CAUTION A, B, C, OR D BURIED BELOW".
A - "ELECTRIC LINE", #42-0064
B - "TELEPHONE LINE", #42-0041
C - "HIGH VOLTAGE LINE", #42-0111
D - "FIBER OPTIC CABLE", #42-0037
CONTACT: REEF INDUSTRIES, INC. 1-800-231-6074
C. CONCRETE ENCASE CONDUIT(S) UNDER ROADWAYS, DRIVEWAYS AND PARKING LOTS. MINIMUM OF 3" CONCRETE ENCASEMENT. (NOT APPLICABLE FOR BRANCH CIRCUITS.)

3 UNDERGROUND CONDUIT DETAIL
N.T.S.

2 POLE MOUNTED LUMINAIRE BASE DETAIL
N.T.S.

ONE LINE NOTES:

A. PARALLEL FEEDER CONDUCTORS SHALL BE CUT TO EXACTLY THE SAME LENGTHS AND SHALL BE FROM THE SAME FACTORY RUN. ALL CONNECTIONS FOR SAME SHALL BE TORQUED TO IDENTICAL VALUES.

B. EXTERIOR ELECTRICAL WORK SHALL NOT ONLY BE WEATHERPROOF AND WATER-TIGHT, BUT SHALL ALSO BE RUST-RESISTANT.

C. CONDUCTORS BELOW GRADE OR SUBJECT TO MOISTURE SHALL BE "XHHW-2".

D. POWER DISTRIBUTION EQUIPMENT SUPPLIER SHALL PROVIDE EQUIPMENT APPROPRIATELY RATED AND BRACED TO ACCOMMODATE THE AVAILABLE FAULT CURRENT AT THE UTILITY COMPANY TRANSFORMER SECONDARIES. THIS SUPPLIER SHALL ACCORDINGLY PROVIDE ANY RELATED CALCULATIONS SO THAT THEIR EQUIPMENT IS PROPERLY COORDINATED FOR THE AVAILABLE FAULT CURRENT. THE ELECTRICAL CONTRACTOR SHALL PROVIDE THIS SUPPLIER WITH COPIES OF THE ELECTRICAL DOCUMENTS AS REQUIRED SO THAT PROPERLY RATED/BRACED EQUIPMENT IS PROVIDED UNDER BASE BID.

E. GROUNDING ELECTRODE CONDUCTORS SHALL BE PROVIDED IN STRICT COMPLIANCE WITH NEC, INCLUDING NEC ARTICLE 250 AND TABLE 250.66.

F. EQUIPMENT GROUNDING CONDUCTORS SHALL BE PROVIDED IN STRICT COMPLIANCE WITH NEC, INCLUDING NEC ARTICLE 250 AND TABLE 250.122. THESE CONDUCTORS MAY NOT BE INDICATED ON RISERS OR SINGLE-LINES, BUT SHALL BE PROVIDED UNDER BASE BID NEVERTHELESS.

G. WORKING CLEARANCES SHALL BE PROVIDED FOR ALL ELECTRICAL EQUIPMENT (SWITCHBOARDS, PANELBOARDS, TRANSFORMERS, STARTERS, DISCONNECTS, ETC. AS APPLICABLE) IN STRICT COMPLIANCE WITH NEC CHAPTER 1, PART B, SECTION 110-26(a). LOCATIONS SHOWN ON FLOOR PLANS ARE SCHEMATIC AND DIAGRAMMATIC IN NATURE. THE ELECTRICAL CONTRACTOR SHALL BE RESPONSIBLE FOR ENSURING COMPLIANCE WITH THE ABOVE NEC REFERENCE. THIS REQUIREMENT APPLIES TO EQUIPMENT ON FLOOR PLANS AS WELL AS TO EQUIPMENT SHOWN ON RISER.

H. HOLD ALL NEW OVERHEAD ELECTRICAL WORK AS TIGHT AS POSSIBLE TO UNDERSIDE OF ROOF DECK. LOCATE ANY RELATED PULLBOXES SO THAT THEY WILL BE FULLY ACCESSIBLE AFTER ALL CONSTRUCTION WORK IS COMPLETE. AS WITH ALL WORK, COORDINATE IN ADVANCE WITH ALL OTHER TRADES.

I. ROUTE FEEDER CONDUITS BELOW GRADE WHEREVER POSSIBLE. COORDINATE WITH ALL ARCHITECTURAL, STRUCTURAL & MECHANICAL DRAWINGS VERY CAREFULLY BEFORE LAYING OUT FEEDER ROUTES.

J. ALL PANELS SHALL BE NEMA 1 ENCLOSURES UNLESS OTHERWISE NOTED.

K. ALL PANELS SHALL BE SURFACE MOUNTED UNLESS OTHERWISE NOTED.

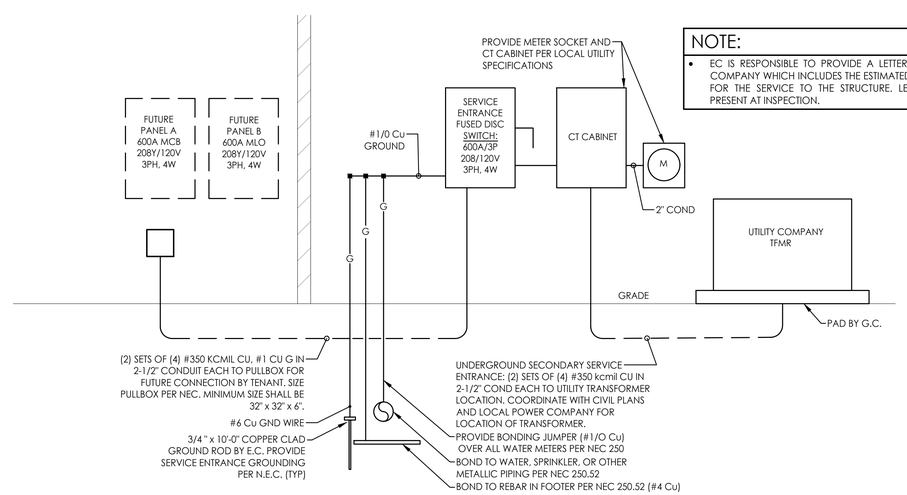

NOTE:
- EC IS RESPONSIBLE TO PROVIDE A LETTER FROM UTILITY COMPANY WHICH INCLUDES THE ESTIMATED KAIC RATING FOR THE SERVICE TO THE STRUCTURE. LETTER MUST BE PRESENT AT INSPECTION.

1 ONE LINE DIAGRAM
N.T.S.

Consultant:
annex ENGINEERING GROUP
589 w nationwide blvd ste b
columbus, ohio 43215
tel: 614.481.2292
fax: 614.487.8777

BID SET

NOT FOR CONSTRUCTION

COPYRIGHT 2026
ALL DRAWINGS AND SPECIFICATIONS SHALL REMAIN THE PROPERTY OF ANNEX ENGINEERING GROUP AND MAY NOT BE USED, DUPLICATED, OR ALTERED WITHOUT THE WRITTEN CONSENT OF THE ENGINEER.

ECP PARTNERS
ECP PARTNERS, LLC
4362 NORTHLAKE BLVD, SUITE 213
PALM BEACH GARDENS, FL 33410

CMG HIGHLAND CITY SHELL, FL
TBD US 98
LAKELAND, FL 33812

Issue Record:

02.25.2026	PERMIT SET
02.25.2026	BID SET

Revisions:

Drawn: AB
Checked: SS

Project No.
EPL002

Contents:
DETAILS & DIAGRAMS
ELECTRICAL SHELL

E400

SPECIFICATIONS - DIVISION 26 - ELECTRICAL

ELECTRICAL SPECIFICATIONS - SECTION 26

GENERAL REQUIREMENTS

THE GENERAL PROVISIONS OF THE CONTRACT INCLUDING THE GENERAL AND SUPPLEMENTAL CONDITIONS AND GENERAL REQUIREMENTS APPLY TO THE WORK IN THIS SECTION. BEFORE SUBMITTING A BID, EXAMINE DOCUMENTS OF ALL OTHER TRADES, VISIT THE SITE AND GET ACQUAINTED WITH ALL CONDITIONS THAT MAY IN ANY WAY WHATSOEVER AFFECT THE EXECUTION OF THIS CONTRACT. TAKE MEASUREMENTS AND BE RESPONSIBLE FOR EXACT SIZE AND LOCATIONS OF ALL OPENINGS REQUIRED FOR THE INSTALLATION OF WORK. FIGURED DIMENSIONS ARE REASONABLY ACCURATE AND SHOULD GOVERN IN SETTING OUT WORK. WHERE DETAILED METHOD OF INSTALLATION IS NOT INDICATED OR WHERE VARIATIONS EXIST BETWEEN DESCRIBED WORK AND APPROVED PRACTICE, DIRECTION OF THE OWNERS REPRESENTATIVE ON JOB SITE SHALL BE FOLLOWED.

THE CONTRACT INCLUDES ALL ITEMS OF MATERIAL AND LABOR REQUIRED FOR THE COMPLETE INSTALLATION AND FULL OPERATION OF THE ELECTRICAL WORK AS SHOWN ON THE DRAWINGS AND HEREINAFTER SPECIFIED. ALL MATERIALS AND METHODS SHALL BE IN ACCORDANCE WITH APPLICABLE CODES, REGULATIONS AND/OR ORDINANCES AND MEET THE APPROVAL OF LOCAL INSPECTION AUTHORITY HAVING JURISDICTION. THE LATEST EDITION OF THE NATIONAL ELECTRIC CODE SHALL BE THE MINIMUM REQUIREMENT FOR ALL WORK. EXAMINE THE DRAWINGS AND SPECIFICATIONS FOR COMPLIANCE WITH THE ABOVE CODES, REGULATIONS AND ORDINANCES AND BASE BID AND WORK ACCORDINGLY. OBTAIN AND PAY FOR ALL PERMITS AND INSPECTIONS RELATED TO THIS WORK. A CERTIFICATE OF APPROVAL FOR WORK FROM INSPECTION AUTHORITY SHALL BE GIVEN TO THE OWNER BEFORE FINAL ACCEPTANCE WILL BE GIVEN BY OWNERS REPRESENTATIVE.

ALL WORK, MATERIALS, AND EQUIPMENT SHALL HAVE A WARRANTY FOR THE DURATION OF THE INSTALLATION OR A PERIOD OF 1 YEAR, WHICHEVER IS LESS, AFTER ACCEPTANCE OF THE WORK BY THE OWNER. ANY DEFECTIVE ITEMS SHALL BE REMOVED AND REPLACED AT THE ELECTRICAL SUB-CONTRACTORS EXPENSE AND TO THE SATISFACTION OF THE OWNER.

PERFORM WORK UNDER THIS CONTRACT IN CLOSE HARMONY WITH OTHER CONTRACTORS SO COMPLETED WORK SHALL PRESENT A NEAT AND WORKMANLIKE INSTALLATION. EXPOSED FINISHED MATERIALS AND EQUIPMENT SHALL BE CAREFULLY CLEANED AND WIPED TO REMOVE GREASE, SMUDGES, DUST AND OTHER SPOTS AND LEFT SMOOTH AND CLEAN. DURING THE PROGRESS OF THE WORK, THE ELECTRICAL SUB-CONTRACTOR SHALL CAREFULLY CLEAN UP AFTER HIS MEN AND SHALL LEAVE THE PREMISES AND ALL PORTIONS OF THE BUILDING IN WHICH HE IS WORKING FREE OF DEBRIS AND IN A CLEAN AND SAFE CONDITION.

WHENEVER THE WORDS "CONTRACTOR", "THIS CONTRACTOR", ETC. APPEAR ON DRAWINGS OR IN THESE SPECIFICATIONS FOR THE ELECTRICAL WORK, IT SHALL REFER TO THE ELECTRICAL SUB-CONTRACTOR. WHENEVER THE WORD "PROVIDE" APPEARS IN THESE DOCUMENTS, IT SHALL BE INTERPRETED TO MEAN "FURNISH & INSTALL".

THE EXACT MOUNTING HEIGHT OF OUTLETS SHALL BE DETERMINED IN THE FIELD WITH RELATION TO ARCHITECTURAL DETAILS AND EQUIPMENT BEING SERVED. IT SHALL BE THE RESPONSIBILITY OF THIS CONTRACTOR TO COORDINATE OUTLET LOCATION WITH EQUIPMENT. THE OWNERS REPRESENTATIVE SHALL BE PERMITTED TO RELOCATE ANY OUTLET PRIOR TO INSTALLATION WITHIN A 15 FOOT LIMIT AT NO ADDITIONAL CHARGE IN CONTRACT PRICE. ALL FASTENERS, HANGERS AND METHODS OF HANGING EXPOSED WORK IN FINISHED AREAS SHALL BE SUBMITTED TO THE OWNERS REPRESENTATIVE FOR APPROVAL BEFORE INSTALLATION.

THIS CONTRACTOR SHALL BE RESPONSIBLE FOR THE PROPER INSTRUCTION OF EACH SYSTEM TO THE SATISFACTION OF THE OWNERS REPRESENTATIVE.

THE ELECTRICAL CONTRACTOR SHALL CONSULT THE PLUMBING, HEATING AND ARCHITECTURAL PLANS IN ALL INSTANCES BEFORE INSTALLING HIS WORK SO THAT HIS PIPING WILL NOT INTERFERE WITH THOSE BRANCHES. IN THE EVENT OF A CONFLICT, THIS CONTRACTOR SHALL REPORT TO THE OWNERS REPRESENTATIVE AT ONCE AND DO NO FURTHER WORK UNTIL A SATISFACTORY ARRANGEMENT IS DECIDED UPON. ANY WORK DONE, OR EQUIPMENT PLACED IN POSITION BY THIS CONTRACTOR, CREATING A CONFLICT IN VIOLATION HEREOF, SHALL BE READJUSTED TO THE SATISFACTION OF THE OWNERS REPRESENTATIVE AT THE EXPENSE OF THE CONTRACTOR. THE DECISION OF THE OWNERS REPRESENTATIVE SHALL BE FINAL IN REGARD TO CHANGES DUE TO CONFLICTING CONDITIONS. CONTRACTOR SHALL COMPLETE HIS WORK OR ANY PART THEREOF AT SUCH TIME AS MAY BE DESIGNATED BY THE OWNER, SO THAT IT CAN BE USED FOR TEMPORARY OR PERMANENT USE AND SUCH USE OF THE SYSTEM SHALL NOT BE CONSTRUED AS AN ACCEPTANCE OF SAME BY OWNER.

MATERIALS AND EQUIPMENT

ALL MATERIALS AND EQUIPMENT SHALL BE NEW. ALL MATERIALS, APPARATUS AND EQUIPMENT SHALL BEAR THE UNDERWRITERS LABORATORIES INC., LABEL WHERE REGULARLY SUPPLIED. CERTAIN MANUFACTURERS OF MATERIAL AND EQUIPMENT ARE SPECIFIED AND PLANS ARE DETAILED ACCORDING TO THIS MATERIAL. THIS CONTRACTOR SHALL BASE HIS BID ON FURNISHING AND INSTALLING THIS MAKE OF MATERIAL AND EQUIPMENT.

WHERE MORE THAN ONE MAKE OF MATERIAL OR EQUIPMENT IS SPECIFIED, THE CONTRACTOR SHALL STATE IN HIS BID WHICH MAKE HE PROPOSES TO FURNISH. SHOP DRAWINGS SHALL BE SUBMITTED ON MATERIAL AND EQUIPMENT TO BE FURNISHED BY THE CONTRACTOR FOR ENGINEERS APPROVAL. THIS APPROVAL TO BE OBTAINED PRIOR TO SHIPMENT OF EQUIPMENT.

ELECTRICAL IDENTIFICATION

PROVIDE MANUFACTURERS STANDARD SELF-ADHESIVE VINYL TAPE NOT LESS THAN 3 MILS THICK BY 1-1/2" WIDE. WHERE APPLICABLE, INSTALL ON ALL CONCEALED RACEWAYS AT CONNECTION TO ALL JUNCTION BOXES, PULL BOXES, EQUIPMENT, WALL/FLOOR/ROOF PENETRATIONS, ETC. UNLESS OTHERWISE INDICATED OR REQUIRED BY GOVERNING REGULATIONS, PROVIDE ORANGE TAPE WITH BLACK LETTERS. PROVIDE CIRCUIT IDENTIFICATION BANDS FOR ALL CABLES AND CONDUCTORS. PROVIDE MANUFACTURERS STANDARD COLOR CODING FOR CABLE/CONDUCTOR JACKET AND/OR INSULATION FOR ALL CABLES AND CONDUCTORS OF ALL SYSTEMS. MATCH IDENTIFICATION WITH MARKING SYSTEM USED IN EXISTING SYSTEMS SHOP DRAWINGS, CONTRACT DOCUMENTS, AND SIMILAR PREVIOUSLY ESTABLISHED IDENTIFICATION FOR PROJECTS ELECTRICAL WORK. PROVIDE ON ALL CONDUCTORS OF ALL SYSTEMS.

THE FOLLOWING INSULATION COLOR CODE SHALL BE USED FOR SYSTEM AND VOLTAGE IDENTIFICATION. THIS SHALL APPLY TO BOTH FEEDER AND BRANCH CIRCUIT WIRING. INTERCHANGE OF COLORS SHALL NOT BE PERMITTED.

208Y/120V SYSTEM:	BLACK, RED, BLUE & WHITE (NEUTRAL)
480Y/277V SYSTEM:	BROWN, ORANGE, YELLOW & GRAY (NEUTRAL)
EQUIPMENT GROUNDING:	GREEN

ALL EQUIPMENT & SYSTEM IDENTIFICATION NOMENCLATURE SHOWN ON DRAWINGS OR LISTED HEREIN IS SHOWN FOR GENERAL DESIGN AND INSTALLATION REFERENCE ONLY. THE ACTUAL NAMEPLATE, ETC. NOMENCLATURE FOR THIS PROJECT SHALL BE VERIFIED BY ELECTRICAL CONTRACTOR IN FIELD PRIOR TO FABRICATION AND WHERE APPLICABLE, SHALL BE AN EXTENSION OF EXISTING NOMENCLATURE USED ON THE SITE AS DETERMINED IN FIELD BY ELECTRICAL CONTRACTOR.

GROUNDING

ALL METALLIC CONDUIT, SURFACE WIREWAYS, SUPPORTS, CABINET AND EQUIPMENT SHALL BE GROUNDED IN ACCORDANCE WITH THE LATEST ISSUE OF THE NATIONAL ELECTRIC CODE.

CONDUIT AND FITTINGS

NORMAL SYSTEM BRANCH CIRCUITS SHALL BE INSTALLED IN SEPARATE RACEWAYS FROM EMERGENCY SYSTEM POWER.

ALL WIRING FOR DIFFERENT POWER VOLTAGES SHALL BE INSTALLED IN RACEWAY SYSTEMS SEPARATE FROM EACH OTHER.

ALL WIRING FOR THE VARIOUS ELECTRICAL SYSTEMS SHALL BE INSTALLED IN RACEWAY SYSTEMS SEPARATE FROM EACH OTHER.

ALL CONDUIT INSTALLED INDOORS SHALL BE GALVANIZED STEEL EMT (3/4" MINIMUM); ALL FITTINGS FOR SAME SHALL BE SET-SCREW OR COMPRESSION TYPE STEEL, WITH INSULATED THROATS. UNLESS INDICATED OTHERWISE ON DRAWINGS OR IN OTHER PARTS OF THE ELECTRICAL SPECIFICATIONS.

CONDUIT SHALL BE CLEANED INSIDE BEFORE ANY WIRES ARE PULLED. CONDUIT ENDS SHALL BE CAPPED AND PLUGGED WITH STANDARD ACCESSORIES AS SOON AS CONDUIT HAS BEEN PERMANENTLY INSTALLED. CONDUIT INSTALLED WITHOUT CONDUCTORS SHALL BE PROVIDED WITH SWEEP BENDS AND BALING WIRE FOR PULLING.

ALL JOINTS SHALL BE MADE TIGHT WITH WATERTIGHT COUPLINGS MATCHING CONDUIT AND ALL CORNERS SHALL BE MAKE WITH LONG RADIUS. THE ENDS OF ALL CONDUITS SHALL BE CUT SQUARE AND REAMED AND ALL JOINTS BROUGHT TO A SHOULDER. CONDUIT SHALL BE CONTINUOUS BETWEEN OUTLETS TO MAKE A COMPLETE INSTALLATION AND TO EFFECT A CONTINUOUS GROUND. SUITABLE SUPPORTS AND FASTENING SHALL BE PROVIDED FOR CONDUIT.

CONDUIT SHALL BE SUPPORTED BY APPROVED STRAPS, FASTENERS AND HANGERS. HANGERS SHALL BE SUSPENDED FROM RODS. PERFORATED STRAPS WILL NOT BE ACCEPTABLE. FASTENERS SHALL BE LEAD EXPANSION SHIELDS IN BLOCK OR CONCRETE, TOGGLE BOLTS IN HOLLOW WALLS, MACHINE SCREWS ON METAL SURFACES AND WOOD SCREWS ON WOOD CONSTRUCTION. ALL CONDUIT SHALL BE SUPPORTED INDEPENDENTLY FROM ALL OTHER BUILDING SYSTEMS AND SHALL BE SUPPORTED DIRECTLY FROM STRUCTURAL COMPONENTS. WHERE DEFLECTION IS EXPECTED, CONDUITS SHALL BE PROVIDED WITH EXPANSION FITTINGS WITH BONDING JUMPERS. CONDUITS PASSING THROUGH STRUCTURAL MEMBERS SHALL BE PROVIDED WITH STUB AND COUPLING OR SLEEVE IN THE MEMBER.

ALL RACEWAYS SHALL BE ENTIRELY FREE OF PLASTER, MORTAR, WATER AND OTHER FOREIGN MATTER.

WIRE AND CABLE

FURNISH AND INSTALL ALL NECESSARY CABLE OF THE SIZE AND TYPE INDICATED ON THE DRAWINGS OR SPECIFIED HEREINAFTER. ALL WIRE SHALL BE COPPER. ALL WIRING SHALL BE NEW. NO WIRE SMALLER THAN #12 AWG SHALL BE INSTALLED UNLESS SPECIFICALLY DESIGNATED. USE OF #14 COLOR CODED WIRE WILL BE ALLOWED FOR CONTROL CIRCUITS ONLY. ALL CONDUCTORS SHALL BE COPPER. PROVIDE STRANDED CONDUCTORS FOR ALL SIZES UNLESS INDICATED OTHERWISE.

PROVIDE THHN/THWN INSULATION FOR ALL CONDUCTORS NO. 8 AWG AND SMALLER. FOR ALL OTHER SIZES PROVIDE THW OR THHN/THWN INSULATION AS APPROPRIATE FOR THE LOCATIONS WHERE INSTALLED. PROVIDE COLOR CODED INSULATION/JACKET FOR PHASE IDENTIFICATION. ALL WIRES SHALL BE RATED AT 600 VOLTS.

TYPE AC AND MC CABLE SHALL BE FORMED FROM CONTINUOUS LENGTH OF SPIRALLY WOUND, INTERLOCKED ZINC-COATED OR GALVANIZED (INSIDE & OUTSIDE) STRIP STEEL. ALL CONDUCTORS SHALL BE RATED FOR 90 DEG. C. MINIMUM. PROVIDE WITH FULL PARITY SIZED GREEN INSULATED EQUIPMENT GROUND CONDUCTOR. PROVIDE COMPATIBLE STEEL FITTINGS WITH INTEGRAL RED PLASTIC INSULATED THROAT BUSHINGS, COMPLIANT WITH NEC 350-5. CABLES SHALL BE 90 DEG. C. RATED WITH ALL COMPONENTS AND FITTINGS LISTED FOR GROUNDING AND COMPLIANT WITH THE FOLLOWING.

UL STD.4 AND UL STD. 83.
ANSI E119 AND E814.
NEC ARTICLES 250 AND 333.

METHOD OF WIRING - POWER

NEATLY DRESS ALL WORK. INSTALL ALL WORK PARALLEL AND PERPENDICULAR TO SURFACES OR EXPOSED STRUCTURAL MEMBERS, AND FOLLOW SURFACE CONTOURS, WHERE POSSIBLE. KEEP CONDUCTOR SPLICES TO MINIMUM. INSTALL SPLICE AND TAP CONNECTORS WHICH POSSESS EQUIVALENT OR BETTER MECHANICAL STRENGTH AND INSULATION RATING THAN CONDUCTORS BEING SPLICED. USE SPLICE AND TAP CONNECTORS WHICH ARE COMPATIBLE WITH CONDUCTOR MATERIAL. ALL WIRES SHALL BE RUN CONTINUOUS FROM OUTLET TO OUTLET/LUMINAIRE TO LUMINAIRE. INSULATION VALUE OF JOINTS TO BE 100% IN EXCESS OF WIRE. PROVIDE ADEQUATE LENGTH OF CONDUCTORS WITHIN ELECTRICAL ENCLOSURES AND TRAIN THE CONDUCTORS TO TERMINAL POINTS WITH NO EXCESS. BUNDLE MULTIPLE CONDUCTORS, WITH CONDUCTORS LARGER THAN NO 10 AWG CABLED IN INDIVIDUAL CIRCUITS. MAKE TERMINATIONS SO THERE IS NO BARE CONDUCTOR AT THE TERMINAL.

KEEP CONDUCTOR SPLICES TO MINIMUM. PULL CONDUCTORS SIMULTANEOUSLY WHERE MORE THAN ONE IS BEING INSTALLED IN SAME RACEWAY. USE UL LISTED PULLING COMPOUND OR LUBRICANT, WHERE NECESSARY. INSTALL SPLICE AND TAP CONNECTORS WHICH POSSESS EQUIVALENT OR BETTER MECHANICAL STRENGTH AND INSULATION RATING THAN CONDUCTORS BEING SPLICED. USE SPLICE AND TAP CONNECTORS WHICH ARE COMPATIBLE WITH CONDUCTOR MATERIAL. INCREASE WIRE SIZES PER NEC TO OFFSET VOLTAGE DROP AS/IF REQUIRED.

NO WIRE SIZE SMALLER THAN NO. 12 SHALL BE USED FOR ANY BRANCH CIRCUIT UNLESS OTHERWISE NOTED ON PLANS FOR CONTROL CIRCUITS. LARGER SIZES SHALL BE USED WHERE REQUIRED AND/OR INDICATED ON THE PLANS.

PROVIDE THE FOLLOWING MINIMUM WIRE SIZES BASED ON DISTANCES FROM PANEL TO FIRST DEVICE OF A 15 OR 20 AMPERE GENERAL LIGHTING OR RECEPTACLE BRANCH CIRCUIT. IN ADDITION TO UPSIZING CONDUCTORS AS REQUIRED FOR VOLTAGE DROP, PROVIDE MINIMUM #10 AWG CONDUCTORS TO THE LAST DEVICE FOR BRANCH CIRCUITS MORE THAN 150 FEET IN LENGTH.

DISTANCE	AWG WIRE SIZES
UP TO 60 FEET	#12
61 TO 90 FEET	#10
91 TO 150 FEET	# 8
151 TO 240 FEET	# 6

PROVIDE THE FOLLOWING MINIMUM AWG CONDUCTOR SIZES FOR GENERAL BRANCH CIRCUITING THAT ARE NOT INDICATED ON DRAWINGS, BASED ON USING COPPER CONDUCTORS, WHERE APPLICABLE INCREASE AS REQUIRED TO ACCOMMODATE VOLTAGE DROP AND TO ACCOMMODATE SPECIAL CONDITIONS. DO NOT DERATE ANY GROUNDED (NEUTRAL) CONDUCTORS. TEMPERATURE RATINGS LISTED BELOW PERTAIN TO BOTH WIRE AND TERMINATIONS.

	60 DEG. C RATING	75 DEG. C RATING	EQUIPT. GROUNDING
SOURCE BREAKER/FUSE	AWG WIRE SIZE	AWG WIRE SIZE	AWG WIRE SIZE
15 AMPERE	#12	#12	#12
20 AMPERE	#12	#12	#12
25 AMPERE	#10	#10	#10
30 AMPERE	#10	#10	#10
35 AMPERE	# 8	# 8	#10
40 AMPERE	# 8	# 8	#10

OUTLETS SHALL BE LOCATED APPROXIMATELY AS SHOWN ON THE PLANS AND SHALL BE WIRED TO PROVIDE CONTROL OF OUTLETS INDICATED. ALL WIRES OF ANY ONE CIRCUIT SHALL BE RUN IN THE SAME CONDUIT.

TYPE AC/MC CABLE MAY BE UTILIZED ONLY IF NEC APPROVED AND IF APPROVED BY LOCAL AUTHORITY HAVING JURISDICTION AND IF INCLUDED IN THE APPLICATIONS DEFINED BELOW.

15 THROUGH 30 AMPERE BRANCH CIRCUIT WORK. THIS SHALL APPLY ONLY UNDER ALL OF THE FOLLOWING CIRCUMSTANCES AND CONDITIONS.

ONLY WHERE CONCEALED (ALL EXPOSED WIRING SHALL BE INSTALLED IN CONDUIT).

ROUTE ALL CABLES PERPENDICULAR AND PARALLEL TO THE BUILDING ARCHITECTURAL LINES/SURFACES/STRUCTURAL MEMBERS, KEEPING OFFSETS TO A MINIMUM AND FOLLOWING SURFACE CONTOURS WHERE POSSIBLE. MAINTAIN A UNIFORM ELEVATION FOR ALL CABLE RUNS WHEREVER POSSIBLE. ALL CABLES SHALL BE SUPPORTED/ANCHORED AT MAXIMUM 4 FOOT INTERVALS AND WITHIN 12" OF BOX OR OUTLET AND SHALL NOT SAG. INSTALL CABLES IN A MANNER THAT PREVENTS OVERHEATING. CABLES SHALL BE FASTENED DIRECTLY TO THE STRUCTURE USING FACTORY CLAMPS/CLIPS SPECIFICALLY DESIGNED FOR THE RESPECTIVE CABLE (CADDY OR EQUAL).

OUTLET, JUNCTION AND SWITCHBOXES

IN GENERAL, GANG TYPE OUTLET BOXES SHALL NOT BE USED. THE OUTLET BOX LOCATIONS INDICATED ON DRAWINGS SHALL BE CONSIDERED APPROXIMATE, AND THEREFORE, IT SHALL BE INCUMBENT UPON THIS CONTRACTOR TO STUDY THE GENERAL CONSTRUCTION WITH RELATION TO SPACES AND EQUIPMENT SURROUNDING EACH OUTLET. ALL OUTLET, SWITCH AND JUNCTION BOXES SHALL BE MADE OF CODE GALVANIZED STEEL COMPLETE WITH RINGS AND SCREW COVER PLATES AND LOCATED WHERE SHOWN AND NOTED ON DRAWINGS. WHERE CONDUIT IS CONCEALED, BOXES SHALL NOT BE LESS THAN 4" SQUARE X 1-1/2" DEEP. ALL BOXES SHALL BE EQUIPPED WITH PROPER COVERS TO BRING FLUSH WITH FINISHED WALL SURFACE.

WHERE OUTLET BOXES OCCUR IN FACING TILE OR OTHER MATERIAL WHERE SUCH MATERIALS FORM THE FINISHED WALL SURFACE, THE OPENING FOR THE BOX SHALL BE CUT NEATLY AND OF THE SIZE THAT THE COVER PLATE WILL COVER ALL PARTS OF THE OPENING. CONDULETS SHALL BE USED ON EXPOSED RACEWAYS. IN GENERAL, JUNCTION BOXES SHALL BE FURNISHED AND REQUIRED BY THE NATIONAL ELECTRIC CODE, OF THE PROPER SIZES, AND SHALL BE CONSTRUCTED OF #12 GAUGE STEEL WITH REMOVABLE FRONT FASTENED ON WITH COUNTER SUNK HEAD SCREWS OR OTHER APPROVED MEANS. FOR SPECIAL APPLICATION, JUNCTION BOXES SHALL BE NOTED, DETAILED AND/OR SIZED ON THE DRAWINGS OR IN THE FIELD AS REQUIRED.

HEIGHT OF BOXES

PRIOR TO ROUGH-IN, VERIFY ALL BOX/DEVICE MOUNTING HEIGHTS AND LOCATIONS IN FIELD WITH OWNERS REPRESENTATIVE. IN GENERAL, WHERE NOT LOCATED AT COUNTER AREAS, THE HEIGHT OF BOXES FROM FINISHED FLOOR TO CENTER OF BOXES SHALL BE AS FOLLOWS, UNLESS OTHERWISE NOTED ON PLANS:

SWITCHES: 48"
DEVICES AT SPECIAL HEIGHTS: AS DIRECTED IN FIELD.
RECEPTACLES: 18" (UNLESS COUNTER HEIGHT)
TELEPHONE OUTLETS (DESK PHONE): 18"
TELEPHONE OUTLETS (WALL PHONE): 48"
DATA CABLE OUTLETS: 18"
CONTROL STATIONS: 48"

WIRING DEVICES

UNLESS SPECIFICALLY INDICATED OTHERWISE, OR DIRECTED OTHERWISE IN FIELD, PROVIDE WHITE COLOR FOR NORMAL UTILITY WIRING DEVICES.

PROVIDE WALL SWITCHES, THAT ARE FLUSH SELF-GROUNDING WITH GREEN GROUND SCREW AND COLOR CODED COVER, SNAP TOGGLE TYPE, BACK AND SIDE WIRED, SPECIFICATION GRADE. PROVIDE WALL SWITCHES RATED 20A, 120/277 VOLTS, 1 HP AT 120V, A.C. QUIET TYPE. SINGLE POLE SWITCHES SHALL BE EQUAL TO LEVITON #1221-2 SERIES. DOUBLE-POLE SWITCHES SHALL BE EQUAL TO LEVITON #1222-2 SERIES.

PROVIDE DUPLEX AND SINGLE SPECIFICATION GRADE RECEPTACLES, 2-POLE, 3-WIRE GROUNDING, SELF-GROUNDING, GREEN GROUNDING SCREW, GROUND TERMINALS AND POLES INTERNALLY CONNECTED TO MOUNTING YOKE, COLOR CODED BASE. 20-AMPERES, 125-VOLTS, WITH METAL PLASTER EARS, BACK & SIDE WIRING, NEMA CONFIGURATION 5-20R. PROVIDE DUPLEX RECEPTACLES EQUAL TO LEVITON #5362 SERIES. FOR RECEPTACLE CIRCUITS PROTECTED WITH 15A BREAKERS, PROVIDE NEMA 5-15R EQUIVALENTS.

PROVIDE SELF-GROUNDING COMMERCIAL SPECIFICATION GRADE, DUPLEX RECEPTACLES, GROUND-FAULT CIRCUIT INTERRUPTERS; FEED-THRU TYPE, CAPABLE OF PROTECTING CONNECTED DOWNSTREAM RECEPTACLES ON SINGLE CIRCUIT, GROUNDING TYPE UL-RATED 943, CLASS A, GROUP 1, SPECIFICATION GRADE, 20-AMPERES RATING (DEVICE & FEED-THRU), 125-VOLTS, 60 HZ; WITH SOLID-STATE GROUND-FAULT SENSING AND SIGNALING (MAXIMUM THRESHOLD OF 5MA AT 0.025 SECONDS MAXIMUM); EQUIP WITH 20-AMPERE PLUG CONFIGURATION, NEMA 5-20R. PROVIDE GROUND FAULT CIRCUIT INTERRUPTER DUPLEX RECEPTACLES EQUAL TO LEVITON #8898 SERIES.

SPECIAL PURPOSE RECEPTACLES SHALL BE OF THE SIZE, TYPE AND MANUFACTURER AS INDICATED ON THE PLANS OR AS DETERMINED IN FIELD. REFER TO GROUNDING SECTION FOR SPECIAL RECEPTACLE GROUNDING REQUIREMENTS.

ALL DEVICE WALLPLATES SHALL BE STANDARD SIZE; "MIDWAY", "OVERSIZED" ("JUMBO") OR "EXTRA DEEP" WALLPLATES SHALL NOT BE ACCEPTABLE. CONSTRUCT WITH METAL SCREWS FOR SECURING PLATES TO DEVICES; SCREW HEADS COLORED TO MATCH FINISH OF PLATES. WALLPLATES IN FINISHED AREAS SHALL BE COMMERCIAL SPECIFICATION GRADE, THERMOPLASTIC TO MATCH DEVICE COLOR.

SUPPORTS, INSERTS, CUTTING AND PATCHING

THIS CONTRACTOR SHALL DO ALL CUTTING AND PATCHING REQUIRED FOR THE ADMISSION OF HIS WORK. ANY DAMAGE DONE BY THIS CONTRACTOR TO THE BUILDING DURING THE PROGRESS OF HIS WORK SHALL BE MADE GOOD AT HIS OWN EXPENSE. ALL PATCHING SHALL BE DONE BY A SKILLED CRAFTSMAN IN THAT RESPECTIVE TRADE. IT SHALL BE THE RESPONSIBILITY OF THIS CONTRACTOR TO SUPERVISE THE INSTALLATION OF, AND PAY FOR ALL ADDITIONAL MEMBERS, WOOD OR METAL AND LABOR WHICH MAY BE REQUIRED TO SUPPORT ANY TYPE OF PERMANENT OR TEMPORARY ELECTRICAL APPARATUS EMPLOYED IN THE EXECUTION OF THIS CONTRACTORS WORK.

SEAL ALL NEW FLOOR, CEILING, WALL, SLAB, ETC. PENETRATIONS TO MATCH OR EXCEED EXISTING ASSEMBLY FIRE RATINGS. PROVIDE SLEEVE SEALS FOR ALL SLEEVES, PROVIDE SLEEVES FOR ALL PENETRATIONS. ALL PENETRATIONS OF FIRE-RATED OR SMOKE-RATED WALL, FLOORS CEILINGS, ETC. SHALL BE SEALED IMMEDIATELY AFTER RACEWAYS ARE INSTALLED. ALL NEW ELECTRICALLY RELATED WORK SHALL BE SUPPORTED DIRECTLY FROM BUILDING STRUCTURAL MEMBERS. NEW ELECTRICALLY RELATED WORK SHALL NOT BE SUPPORTED FROM DUCTWORK, DUCTWORK HANGER, CEILING SUPPORTS, EXISTING CONDUIT SUPPORT, ETC. ALL CONDUITS (AND CABLE ASSEMBLIES, WHERE APPLICABLE) SHALL BE ROUTED PARALLEL TO BUILDING STRUCTURAL MEMBERS. ANY AND ALL NONCOMPLYING WORK INSTALLED BY THE ELECTRICAL CONTRACTOR SHALL BE REMOVED AND REINSTALLED TO THE SATISFACTION OF THE OWNER'S REPRESENTATIVE AND THE ENGINEER, AT THE EXPENSE OF THE ELECTRICAL CONTRACTOR.

DISCONNECTS

PROVIDE DISCONNECT SWITCHES EQUAL TO SQUARE D TYPE HD, HEAVY DUTY, SAFETY TYPE, QUICK MAKE AND QUICK BREAK AND EXTERNALLY OPERATED.

PROVIDE DISCONNECT SWITCHES BRACED FOR 200,000 A.I.C.

INSTALL DISCONNECT SWITCHES WITHIN SIGHT OF CONTROLLER POSITION UNLESS OTHERWISE INDICATED.

Consultant:
annex ENGINEERING GROUP
589 w nationwide blvd ste b
columbus, ohio 43215
tel: 614.481.2292
fax: 614.487.8777

BID SET

NOT FOR CONSTRUCTION

COPYRIGHT 2026
ALL DRAWINGS AND SPECIFICATIONS SHALL REMAIN THE PROPERTY OF ANNEX ENGINEERING GROUP AND MAY NOT BE USED, DUPLICATED, OR ALTERED WITHOUT THE WRITTEN CONSENT OF THE ENGINEER.

ECP PARTNERS
ECP PARTNERS, LLC
4362 NORTHLAKE BLVD, SUITE 213
PALM BEACH GARDENS, FL 33410

CMG HIGHLAND CITY SHELL, FL
TBD US 98
LAKELAND, FL 33812

Issue Record:

02.25.2026	PERMIT SET
02.25.2026	BID SET

Revisions:

Drawn: AB
Checked: SS

Project No.
EPL002

Contents:
ELECTRICAL SPECIFICATIONS

E700